ELEKTOR ELECTRONICS

THE INTERNATIONAL ELECTRONICS MAGAZINE

MAY 1996
£ 2·65

Focus on: Solar energy

64-CHANNEL LOGIC ANALYSER

CHESS CLOCK

MAINS VOLTAGE MONITOR

05

9 770268 451050

ELEKTOR ELECTRONICS

CONTENTS

May 1996 Volume 2
Number 24 ISSN 0268/45

APPLICATION NOTE

50 **Battery voltage monitor**
A Philips application

AUDIO/VIDEO

28 PROJECT: **Surround-sound subwoofer - Part 3**
Design by T. Giesberts

56 PROJECT: **Digital VU meter - Part 2**
Design by H. Schaake/R. Smeding

COMPUTERS & MICROPROCESSORS

66 PROJECT: **Casio null modem**
Design by N. Fries

FOCUS ON

22 **Solar energy**
By our Editorial Staff

GENERAL INTEREST

14 PROJECT: **Chess clock**
Design by J. Heine

44 PROJECT: **Mains voltage monitor**
Design by H. Bonekamp

TEST & MEASUREMENT

35 PROJECT: **Logic analyser**
Design by L. Lamesch

MISCELLANEOUS INFORMATION

63 Data sheets
72 Electronics on line
74 Index of advertisers
19 In passing ...
68 New Products
9 News from the World of Electronics
74 Next month in Elektor Electronics
62 Readers letters
60 Readers' services

Copyright © 1996 Segment BV

ABC
AUDIT BUREAU OF CIRCULATIONS
CONSUMER PRESS

Solar energy

At this time of the year, with the sunnier weather prevailing (we hope), many people may be tempted to invest in a solar energy system. The technology of such a system is described in this month's 'Focus on' article, but as far as the economic considerations of it are concerned, you would be wise to look up the March 1996 issue of *Which?* in your local library. In this, the Consumer Association warns against the soft sell and advises to do your own sums. The association reckons that, on average, an all-electric household will save back the cost of the system (£ 2,000 upwards) in about 20 years, but a gas/electricity one would take much longer. None the less, a majority of people who had their system installed professionally, were satisfied with it and their annual savings. And, of course, there are environmental considerations to bear in mind as well. If you are thinking of a solar system, contact

The Solar Trade Association, Pengillan, Lerryn, Lostwithiel, Cornwall PL22 0QE. Telephone 01208 873 518.

CD Standardization

Although a truce has been called in the battle for the standard of a high-density CD and digital video disk, the new system, agreed by Philips, Sony, Time Warner, Toshiba and Panasonic, will not become available for almost a year (Christmas?).

The compromise disk will store a full-length feature film in high-quality video, with digital surround sound, on a single side of a standard-size CD, but it will not be able to record tv programmes.

The original protagonists of the two conflicting standards were under pressure from the computer industry as well as from the film industry. The likelihood of a high-density CD becoming a standard multimedia computer rom is far greater than if it were just a carrier for feature films. Obviously, the big film makers were not too pleased with a system which would have allowed anybody to make perfect copies of movie disks.

Research across the spectrum

The UK has a tradition of innovation, not least in telecommunications. For example, in the 1930s Watson-Watt invented radar and, in the 1960s, Kao and Hockam wrote their seminal paper on fibre optic transmission. In recent years, the UK's competitive environment has, as well as boosting competition, also stimulated technological development.

The development of second generation cordless telephone, CT2, is a case in point. Telepoint was seen by the UK Government as low-cost mobile communications for the masses.

When the original Telepoint licenses were issued, there was no appropriate standard. As a result, there were a number of incompatible systems being developed which would each use its own proprietary protocol. This was seen as being anti-competitive, as handsets would be network-specific. Furthermore, prices would be higher because the economies of scale that would occur if there were just a single design would not be obtained.

Consequently, as a result of a Department of Trade and Industry initiative, the Common Air Interface (CAI) committee was set up involving both network operators and equipment makers. It was rapidly agreed that, although networks could initially employ proprietary standards, they must adopt the CAI within a stipulated period.

Even though Personal Communications Networks, PCNs, have overtaken CT2 for mobile communications in the UK, CT2 is far from being dead. The standard received a boost in May 1994 when the European Telecommunications Standards Institute (ETSI) acknowledged that it met all of its technical standards for adoption as a full European Telecommunications Standard (ETS).

Rapid growth

The CT2 Common Air Interface Founders Group collectively owns and manages the CT2 Common Air Interface Standard (CAIS) intellectual property rights (IPR). The rapid growth in global acceptance has been achieved through the founders' policy of issuing royalty-free licensed to any manufacturers provided that production and use is carried out in a territory that has adopted the CT2 CAI standard.

The CT2 technology has developed far more quickly than competing digital cordless technologies in terms of market penetration and product compatibility. There are several successful and growing Personal Communications Services, PCS, system, some now offering a full two-way service, in operation in China, France, Holland, Hong Kong and Singapore, as well as others in Argentina, Australia, Canada, Malaysia, Taiwan and Vietnam already in their start-up phase.

Furthermore, fixed basic local telephone services are being introduced in China and elsewhere where CT2 technology is proving to be more cost-effective than conventional wired loops.

The versatility of the technology is further underlined by its use for cordless PABXs. GEC Plessey Telecoms, GPT, for example, offers products which can be either a complete, stand-alone PABX or provide user mobility on an existing one.

World standard

Thus, it can be seen that CT2 is a technology which, having originated in the UK, has evolved to become a world standard and has found far wider application than was originally envisaged. However, work on high-density wavelength division multiplexing being carried out at the British Telecom Research Laboratories (BTRL) at Martlesham could well have an even greater effect throughout the world.

BRTL has demonstrated a pilot broadband all-optical access network capable of delivering high-quality customer services in the next millennium. This development, claimed to offer the most revolutionary advance in network technology since Strowger invented the first automatic telephone exchange in the last century, will provide instant access to the capacity required for the future interactive and multimedia services, without the need for complex coding and

Music on the Internet

It will soon be possible to download a CD from the Internet in minutes rather than hours, provided you are connected to a cable TV system.

This is becoming possible since the US government relaxed its stance on the use of encryption on the Internet and because cable TV companies will soon be able to supply a cable modem. Such a modem, developed by Motorola, will be able to download a CD at about 300 times the speed of a conventional modem connected to a telephone line.

The European Commission is urgently trying to enforce a copyright control on the Internet, supported by the International Federation of the Phonographic Industry.

Events

April

*A **Computer & Electronics Show** will be held on Sunday, 14 April, at Springfields, nr. Spalding in Lincolnshire. Phone 01473 741533 for details*

*24: '**The Implications of EMC for Marine Electronics**' lecture by D. Sheeky, Navico Ltd, at the Forte Posthouse Hotel, Rochester Airport, Maidstone, at 7.00 pm.*

*The **Sixth International Conference on AC and DC transmission** will be held at the Institution of Electrical Engineers (IEE) in London from 29 April to 3 May 1996.*

May

*2: '**The European Engineer**' Lecture by G. Guest, Manager, Qualifications, IEEIE, at the Boardroom, University of Belfast, at 6.00 pm*

*3: Lecture by Keith Thrower on '**Developments in Radio Receiver Design from the 20s to the 50s**' at the Centre for the History of Defence Electronics at Bournemouth University. Phone 01202 595 273 for details.*

*8: '**Compact Power Supplies**'. Colloquium of the IEE. Phone 0171 240 1871 for details.*

*8–9: The **Electronics Scotland Exhibition** at Gleneagles, Scotland.*

*8: '**The Changing Face of TV and Radio**'. Lecture by M. Hurrell, IEng, MIEIE, at the Forte Posthouse Hotel, Southwold Road, Bexley, at 8.15 pm*

*10: '**Circuit Design Principles and Techniques for high-speed Operation**'. Colloquium of the IEE. Phone 0171 240 1871 for details.*

*15: **Car Electronics Past and Present**. Lecture by J. Carroll, Senior Engineer Electronics, AA, at Ferneham Hall, Fareham at 8.00 pm.*

*21–23: The **Internet World** Exhibition in London.*

data compression.

It demonstrates the feasibility of upgrading narrowband passive optical networks, PONS, operating in the 1300 nm window with optically switched broadband services in the 1550 nm window. Based on high-density wavelength division multiplexing, HDWDM, with channels spaced at 1 nm intervals, it is a cross-connect technology capable of being scaled to any desired size from a small local network to an entire nation.

Response network

Fibre optics will produce a far more responsive and flexible network than currently exists, and customers will be able to access services such as video telephony, video conferencing, video-on-demand, broadcast TV, HDTV, teleworking and virtual reality, instantly, from their homes and offices.

With the Multiplexed Network for Distributive and Interactive Services (MUNDI) demonstrator, which illustrates the capability of the new network, long-held expectations of the information superhighway will, it is believed, be far surpassed.

MUNDI is a partly European Union funded RACE II (Research into Advanced Communications in Europe) project based on an original concept developed at Martlesham.

Without employing HDWDM, it would be necessary to operate a single wavelength channel at a high bit rate of, say, 2.488 Gb/s to ensure that sufficient capacity is available when customer traffic grows to high volumes. By using this HDWDM strategy, additional customer traffic can be accommodated by the addition of extra channels as required.

Direct access

MUNDI will provide the customer with direct access to the full fibre spectrum by allocating wavelength channels for the duration of a call, thus providing a transparent optical pipe between customers. This not only allows very high-quality switched services, but also allows different modulation formats to be used. Furthermore, no video compression coding is required, since customer receivers have a full 110 MHz electrical bandwidth. Alter-natively, the availability of compression coding or multiplexing could be beneficial in allowing efficient exploitation of the available optical bandwidth.

The perennial problem in fibre optics has been to increase the distances between repeaters. However, the exact opposite applies with solitons. These hold promise for data rates of up to 100 Gb/s and beyond being transmitted over long distances, because the soliton effect cannot be employed over relatively short distances.

The Department of Electronics and Computer Science at the University of Southampton has recently developed for the first time a new technique for beat-signal-to-pulse-train conversions based on multi-soliton compression effects. This technique permits the use of considerably shorter fibre lengths than all previous dispersion decreasing fibre, DDF, based conversion schemes and permit the generation of pulse trains with repetition rates in the range 30–40 Ghz, a rate of interest for future telecommunications applications.

While further work is required to explore the performance in details before suitability of this technology for high speed applications is properly assessed, it already indicates the high level of academic research being carried out in the UK to complement that being done in industry and by one of the world's leading telecommunications operators, BT.

DIGITAL CAMERA WITH ZOOM LENS

Kodak has recently introduced a new digital camera, the DC50. Two outstanding features of the new camera are the 3-fold zoom objective and the facility for storing photographs on a PCMCIA memory card.

The new camera is a logical continuation of the plug-and-play developments in the computer world. The user points the camera at the subject, presses a button and a file is produced. This file can be read digitally via an interface cable.

A full-picture CCD with a resolution of 756×504 pixels is used. All pictures are stored with a 24-bit colour resolution and are thus entirely natural.

Depending on the ambient light, a shutter time between 1/16 s and 1/500 s is selected automatically.

The final picture quality depends on the selected compression factor., which also determines the number of images that can be stored in the 1 MB memory. At the lowest compression factor,

the number is 7 and at the highest, 22. A good compromise at a reasonable compression is 11. The compression technique has been developed by Kodak.

The camera is supplied with software for the Macintosh and IBM compatible computers.

When the digital images have been processed, they may be stored in standard formats, such as TIFF, PICT, EPS, BMP and JPEG.

Apart from the integral memory of 1 MB, the camera is fitted with a PCMCIA slot (industry standard ATA, Type I or II) to which an additional memory card can be connected. These facilities are not (yet) available on other digital cameras in the same price range.

[EA-1610]

DIGITAL OSCILLOSCOPE SETS STANDARD

Digital oscilloscopes have the serious drawback that analogue data have to be sliced into tiny morsels. In this process, however accurately carried, some information is invariably lost. With their new development, InstaVu, Tektronix has minimized these losses to such an extent that digital oscilloscopes are beginning to take over from analogue instruments as far as performance is concerned.

Almost exactly fifty years after Tektronix launched its first oscilloscope, it has introduced a new series of oscilloscopes with an outstanding improvement. In the early years, the trigger circuit provided a much improved operability of oscilloscopes. Now, InstaVu, which took 13 years to develop, must ensure that digital oscilloscopes will take a major slice of the market in the next few years. Under the slogan 'Faster than analogue with the power of digital', it is pointed out that, because of InstaVu, digital oscilloscopes invariably give better measurement results than their analogue counterparts. Also, the TDS500B oscilloscope makes digital technology accessible at more affordable cost.

As the name digital oscilloscope indicates, information must be stored in a digital domain before it can be shown on the CRT. In modern instruments, the digitizing of analogue signals is performed at high speed and the results are stored in a memory with a capacity of up to a few hundred kilobytes (KB). Assuming a standard CRT, the vertical resolution of most digital instruments is 256 pixels, while there are about 512 samples on each horizontal line.

In analogue oscilloscopes, the vertical and horizontal resolution is virtually unlimited and depends primarily on the bandwidth of the system. In an analogue instrument, recurring signals can be put onto the screen almost continuously. The data are only not processed during the field flyback (about 1.7 μs). Fast analogue oscilloscopes can process up to 400,000 images per second.

Since the processing of the large quantities of digital data requires much arithmetic, a digital oscilloscope has a relatively long dead time of about 7 ms. During this time, the data are transferred from a buffer memory to the screen memory. From this it is clear that, since a digital instrument can process only 100–200 images per second, there is a vast difference between an analogue and a digital scope.

This problem is resolved by the patented InstaVu technology. The heart of this system is a fast DSP capable of processing 1 Gb of data per second. The digitized data are stored in a buffer memory of up to 500 KB. The DSP builds up the image by evaluating all samples in the buffer memory. Every 30 ms a picture is composed from up to 12,000 samples. The speed at which the buffer memory is filled depends in practice only on the speed at which trigger pulses appear sequentially. Depending on the exact type of oscilloscope, the system allows a speed of 100,000, 180,000 or 400,000 images per second.

On top of this all, there is a difficulty which cannot be resolved easily even by an analogue instrument. If, for instance, a spike, dropout or jitter occurs at infrequent intervals, it is hardly, if at all, noticed.

Even here, InstaVu is of help to the user. Each digital image is composed by comparing 12,000 samples with each other via an OR function. All deviations, even those that happen only once, can be made visible by a suitable command. A push on the button 'InstaVu' causes the difference signal and any interference to be shown on the CRT during a presettable display period. [EA-1600]

In brief

Telecoms deregulation: final steps?

The Department of Trade & Industry has begun the process that is aimed at breaking the duopoly of British Telecom and Mercury in international services.

Designers' handbooks

A revised EMC Reference Handbooks and a new guide to selecting ICs have been published by the Federation of the Electronics Industry.

Prime minister on Internet

Prime Minister John Major is to go on the Internet allowing computer-literate voters to e-mail him with complaints, questions and comments. The Government Centre for Information Systems, CCTA, is also negotiating with the House of Commons about making every Member of Parliament accessible to voters via the Internet.

Virus protection

A microchip that can protect against attacks by computer viruses and hackers by interrogating users once they gain entry has been invented by a Scottish electronics engineer. If they have no right to be there, the chip can refuse them access to the computer's programs or memory, and defend its systems from damage.

Pronunciation aid for disabled children

Children with speech and hearing difficulties will now be able to learn how to pronounce words they cannot hear properly through images on a personal computer. A system developed by Visible Sound displays digital images of word sounds on a screen in front of a child who then tries to match the waveform by attempting to pronounce the word displayed into a microphone. When the shapes match, the child knows the word has been pronounced correctly. The system can be programmed to take regional accents into account.

intelligent chess clock

Chess remains a very popular game, perhaps more so in eastern Europe than in the western world, although this seems to be changing, probably because of the many chess programs for computers that have been introduced over the past few years. One of these, *Deep Blue*, earlier this year inflicted a surprise defeat on world champion Gary Kasparov. It seems, however, that Kasparov underestimated the computer in that first game, because over the series he easily defeated the computer. This article is not about such a computer, but about an intelligent chess clock, mechanical versions of which have been in use for well over a hundred years. The clock may also be used to count the maximum number of moves each player may make during a game.

design by J. Heine

Chess game monitored by microprocessor

The rules of the game of chess are strictly observed during a contest so as to ensure honest play. One of the requirements for an honest conduct is that each player gets the same amount of time (in normal match play, 2 hours for the first 40 moves). This requirement brought about the chess clock. Although mechanical versions are accurate and reliable, the electronic one presented here is even more so, being based on a Type MCS51 microprocessor. When the time allotted to a player has elapsed, the relevant part of the display of the clock goes black. There is no audible indication – intentionally so – since, in a tournament, this might break the concentration of other players.

The clock may count from nought to maximum playing time or vice versa. The maximum playing time of 9 hours, 59 minutes, 59 seconds – more than adequate for an interesting contest – is set independently for each player. If an additional handicap, such as a limit on the number of moves, is required, that is also provided for.

An integral RS232 interface enables a desktop computer or printer to be connected to the clock to compile a record of the game. After each move, the clock transmits a line of text to the computer or printer, in which the order number of the move as well as

Brief data of chess clock

Control	*Microprocessor*
Operation	*Menu driven*
Interface	*Serial to pc or printer*
Log function	*Via pc or printer*
Display	*lcd (one line)*
Languages	*Dutch, English, French, German*
Power supply	*Mains (adaptor) and NiCd battery*
Functions	*Count time remaining* *Count time elapsed* *Count number of moves*
Number of players	*2*
Maximum game time	*9 h 59 m 59 s*

the remaining or elapsed time of both players is contained. Owing to the simple protocol chosen for this, there is no need of special software. Any terminal program can process the information in the shape of text.

Circuit description

The chess clock described is a compact microprocessor system that has been designed for one specific purpose: the monitoring of two chess players and ensuring that the game, as far as time is concerned, proceeds as fairly as possible. In the circuit of **Figure 1**, the microprocessor is IC_1. The type chosen, an 8751, is a once-only-programmable microcontroller that has the required memory capacity on board: apart from 128 bytes of RAM, there is also 4 KB of program memory. The benefits of this arrangement are proven by the compactness of the circuit. Other than the microprocessor, the clock contains a power supply and a very compact RS232 interface. Communication with the user takes place via an LCD module that is connected to K_2.

The power supply may be fed by two 1.2 V NiCd batteries or a 9–12 V mains adaptor connected to K_5. In the latter case, the direct voltage is applied to voltage regulator IC_2 via D_2. The use of a mains adaptor is signalled by the microprocessor via R_3 and D_1. The output of IC_2 is applied to on/off switch S_{10} via D_7. As long as the mains adaptor is connected to K_5, the NiCd battery is trickle-charged. The battery voltage is applied to the battery indicator input (LBI) of IC_3 via attenuator R_4-R_5. If the battery is discharged, or nearly so, the low battery out (LBO) output is made active. This is signalled to the microprocessor, which thereupon actuates the battery icon on the display. If the battery is low when the clock is first switched on, a text message to this effect is displayed on the clock.

Circuit IC_3, a MAX641 (see Data Sheet

Figure 1. Circuit diagram of the microprocessor-controlled chess clock with a multi-language display.

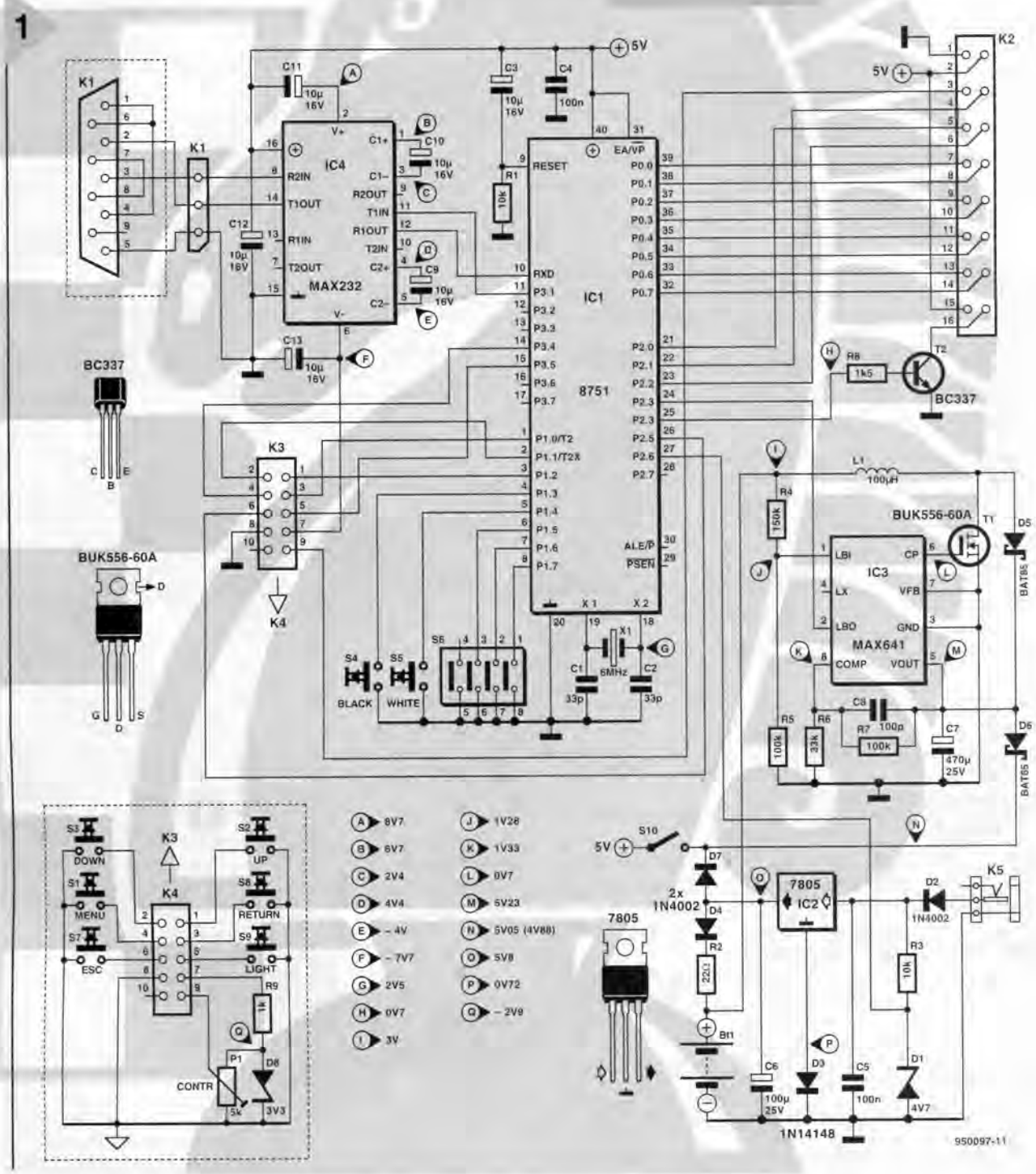

2

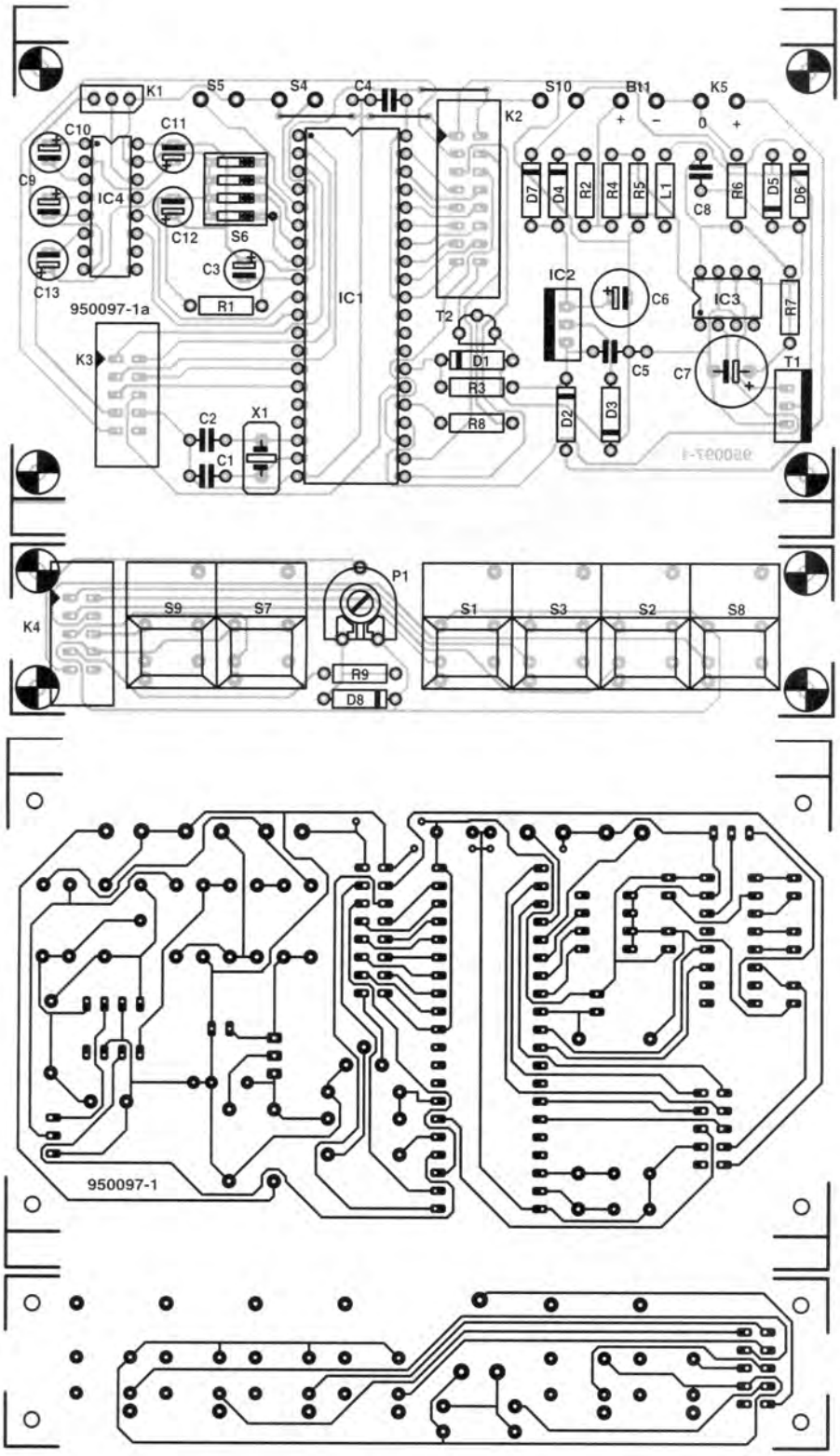

Figure 2. The printed-circuit for the chess clock must be cut or snapped into two before any soldering is done.

elsewhere in this issue), also ensures that the microprocessor is provided with the correct supply voltage when the mains adaptor is switched off. It can do this, because it is an intelligent voltage converter able to convert the low (down to 1.5 V) battery voltage to 5 V. The voltage conversion is effected by a step-up circuit consisting of inductor L_1, MOSFET T_1, Schottky diodes D_5 and D_6, and some passive components. The converter is actuated when the level at output V_{out} drops below 4.5 V. The potential generated by the converter is applied to S_{10} via D_6. As long as the mains adaptor is present and provides the correct potential, D_6 is cut off, and the converter, although it is active, does not play a significant role. When the mains adaptor is disconnected, the converter begins to deliver power: the battery voltage of 2.4 V is stepped up to about 5 V. The lower the battery voltage, the more current the converter draws from the battery. At minimum battery voltage, the current may rise to about 40 mA, not taking

Parts list

Resistors:
R_1, R_3 = 10 kΩ
R_2 = 22 Ω
R_4 = 150 kΩ
R_5, R_7 = 100 kΩ
R_6 = 33 kΩ
R_8 = 1.5 kΩ
R_9 = 1 kΩ
P_1 = 4.7 kΩ (5 kΩ) preset

Capacitors
C_1, C_2 = 33 pF
C_3, C_9–C_{13} = 10 μF, 16 V, radial
C_4, C_5 = 100 nF
C_6 = 100 μF, 25 V, radial
C_7 = 470 μF, 25 V, radial
C_8 = 100 pF

Inductors:
L_1 = 100 μH

Semiconductors:
D_1 = 4.7 V, 400 mW zener diode
D_2, D_4, D_7 = 1N4002
D_3 = 1N4148
D_5, D_6 = BAT85
D_8 = 3.3 V, 400 mW zener
T_1 = BUK556A-60A
T_2 = BC337

Integrated circuits:
IC_1 = 87C51 (programmed: order no. 946645-1)†
IC_2 = 7805
IC_3 = MAX641 (see Data Sheet in this issue)
IC_4 = MAX232

Miscellaneous:
K_1 = 9-way sub-D connector, female
K_2 = 16-way box header
K_3 = 10-way box header
K_4 = 10-way flatcable connector for board mounting
K_5 = adaptor plug, male, for chassis mounting
S_1–S_3, S_7–S_9 = miniature push-button (digitast) switches (ITT) (Viewcom 0181 471 9338))
S_4, S_5 = push-button switch with make contact for chassis mounting*
S_6 = quadruple DIP switch
S_{10} = SPST switch
X_1 = crystal 6 MHz
BT_1 = NiCd battery, 2.4 V, 500–1000 mA
Enclosure, for instance, Bopla BA-916 (Phoenix Mecano 01296 398855)
LCD module, 1 line, 16 characters, backlighted, Hitachi LM087LN or Batron BT11612* (see text)
PCB Order no. 950097†

* see text
† available as one package, Order no. 950097-C (see Readers' services

into account the current needed for the background lighting of the LCD module. With a backlighted display, the lighting is always on when a mains adaptor is powering the unit; with a battery supply, the lighting may be switched off with S_9.

The serial connection to computer or printer is supported by IC_4. This IC, in conjunction with capacitors C_9 and C_{10}, is able to convert TTL levels to RS232 levels. Capacitors C_{11} and C_{13} smooth the transformed voltage. Serial data signals R¥D and T¥D are derived from pins 10 and 11 of the microprocessor respectively.

The clock is operated by a number of press keys housed on a separate printed-circuit board (snapped off from the mother board). The mother board is connected to the press-key board via a short length of 10-way flatcable between K_3 (mother board) and K_4 (press-key board).

The contrast of the display is set with P_1.

The switches that need to be pressed by the players are S_4 (white) and S_5 (black).

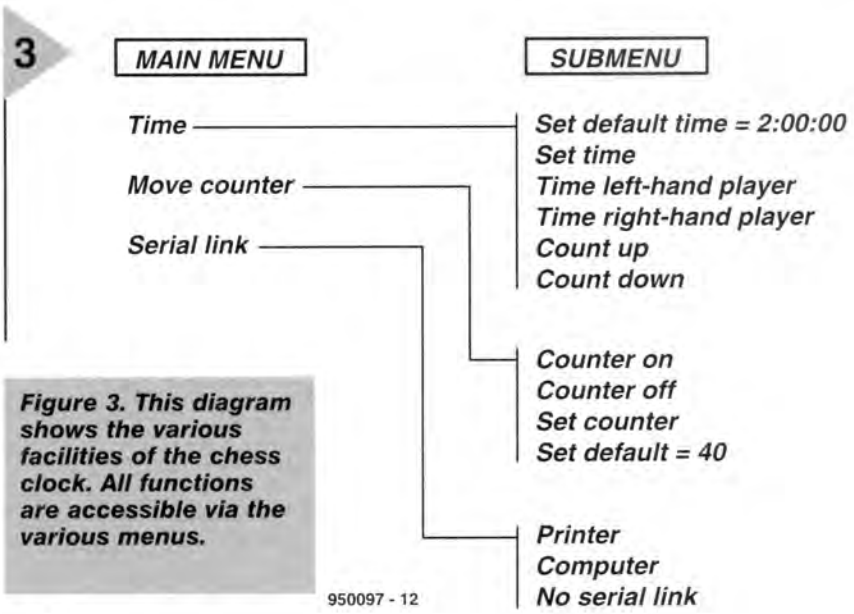

Figure 3. This diagram shows the various facilities of the chess clock. All functions are accessible via the various menus.

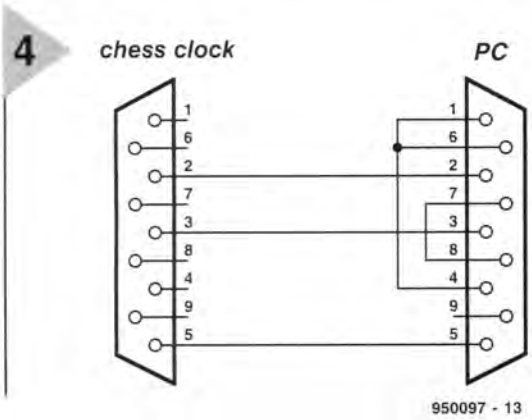

Figure 4. The chess clock can be connected to a computer or printer via a 9-core flatcable. If this option is used, the progress of the chess game can be recorded.

CONSTRUCTION

text: Construction of the circuit is straightforward if the printed-circuit board shown in **Figure 2** is used. Before any work is done, however, the board should be cut or snapped into two along the dashed line. Then, cut out the corners of the mother board as indicated by the printed pattern. Note that this is only necessary if the specified enclosure is used.

Populating the boards should not present any undue difficulties, but note the following. IMPORTANT: on the printed-circuit board the connections of C_{13} are shown the wrong way around: its negative terminal should be nearest C_9. Also, the cathode ring of D_3 has been removed since it was shown incorrectly. This diode must be turned 180° with respect to D_2. Its polarity is shown correctly in Figure 1 and Figure 2.

When the mother board is linked to the press-key board, and the display is connected to K_2, the mains adaptor may be connected to K_5.

One of four languages, Dutch, English, French or German, may be selected by setting the three switches of DIP switch S_6 is shown in **Box 2**.

When the clock is switched on, the display reads 'Chessy V2.0'.

The parts list specifies two different types of display: an inexpensive standard type and a more expensive type with 12-mm high characters. The choice between these is purely individual.

FAULTFINDING

Although very unlikely, it may happen in very rare cases that, after the clock has been painstakingly built, it does not work (correctly). Normally, the fault will be found fairly quickly. Check whether all ICs are seated properly in their sockets and whether the polarity of electrolytic capacitors and diodes has been observed.

Next, check that the direct voltages at various points in the circuits coincide with those given in the diagram (Figure 1). Note that deviations of 10–20% from the indicated values are acceptable. Two values are shown on the 5 V line: those in brackets apply when the circuit is powered by a 3 V battery. The values around IC_3 are also measured with a supply voltage of 3 V. Pin 6 caries a rectangular waveform: in the prototype, a multimeter set to the 1 V d.c. range showed an average value of 700 mV at this pin.

Subsequently, check the supply voltage to the processor directly at the pins, not at the socket terminal or at the track side of the board. The 0 V line of the supply is at pin 20. Thus, when checking the supply voltage, connect the multimeter plus probe to pin 40, and the negative probe to pin 20, of the processor. The level of the potential should be the same as that measured across C_6. If there is a difference, check the connections and, using the plus probe of the meter, trace the tracks and junctions on the board until the fault is found.

Even the oscillator can be tested with a multimeter: the level at pin 18

Selecting a language

The display of the chess clock can be read in one of four languages: Dutch, English, French and German as required.

The table shows the settings of DIP switch S_6 for selecting one of these languages.

Setting of DIP switch				
1	2	3	4	language
ON	OFF	OFF	-	Dutch
OFF	ON	OFF	-	French
OFF	OFF	ON	-	German
all other combinations				English

5

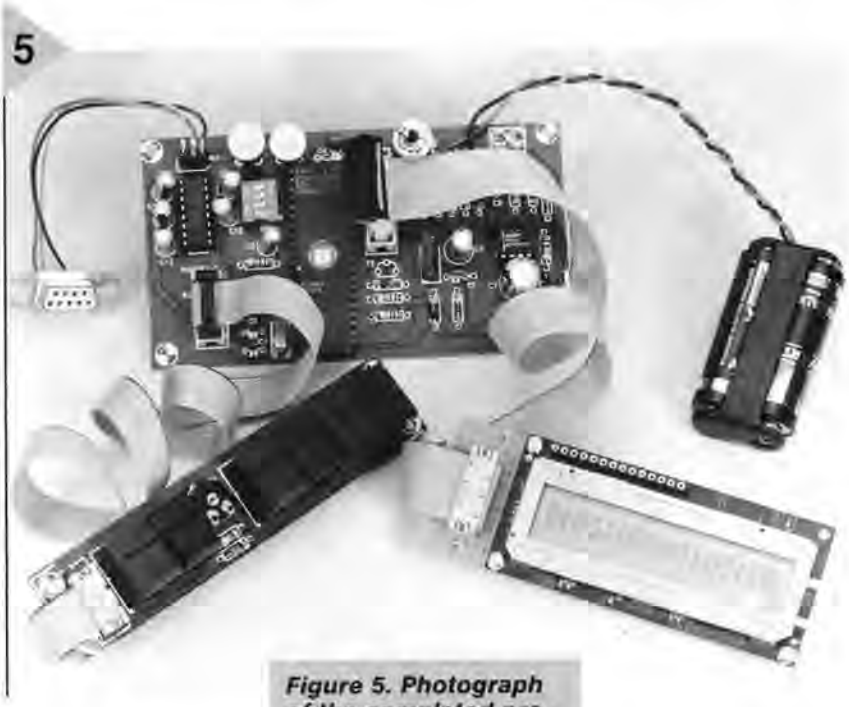

Figure 5. Photograph of the completed prototype chess clock, which is likely to become an indispensable tool for many chess players.

must be neither 0 V nor 5 V but a value somewhere between. If an oscilloscope is available, check the waveform and signal frequency at pin 18; the frequency should be 6 MHz at a level of 1.5 V. If this is not the case, start the oscillator by resetting the processor: this is done by briefly connecting pin 9 to +5 V. Check that a reset has been effected and check whether the level at pin 18 has changed.

If the supply lines are all right and the oscillator is working, check all processor pins with an oscilloscope. There should be digital signals, that is, voltages of 0–0.8 V or 2.4–5.0 V, on most of the pins, but note that there are some pins, such as pins 3 (contrast display) and 25, where other levels are permissible.

Following these procedures should lead to a rapid detection of the fault.

THE SOFTWARE

text: The description so far has shown how the chess clock was designed and how it works. Now for its operation. The four menus that may appear on the display when various keys are operated are shown in **Figure 3**. On the basis of these, the operation of the chess clock is easy to follow. The main menu gives access to three sub-menus, each of which has its own specific functional area: time; counting, and communication. Because of the simplicity of operation, particularly since the instructions are available in four languages, there should be no problems or difficulties.

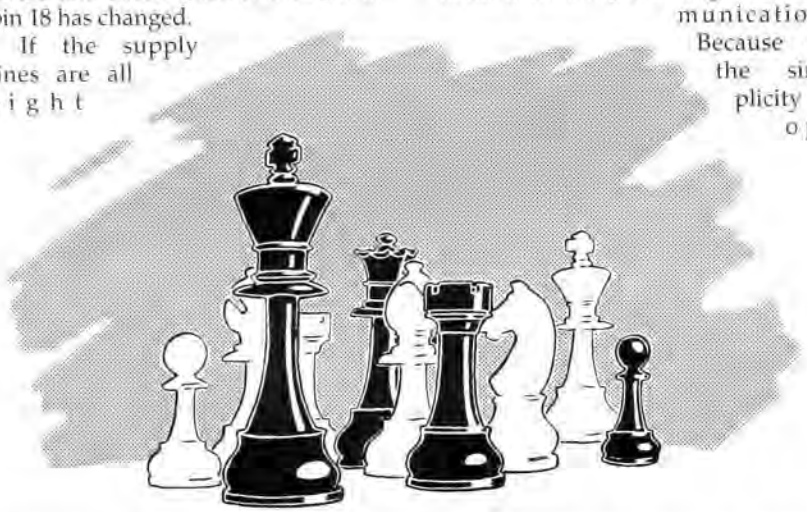

FINALLY

The chess clock may be connected to an optional computer or printer via a standard 9-way serial cable (all pins connected 1:1). The data rate is 2400 baud; eight data bits and one stop bit are used.

[930087]

In passing ...

Nothing in electronics is as constant as change. Even unsolved problems have continuity. Many for a long time, indeed.

As an instance, consider the flat monitor or TV screen. In spite of all development, technologies, prototypes and prognoses, whenever we look at a computer screen or a television receiver, we still look at a glass tube. Surely, now digital video technology is well advanced, the time is ripe for a really new television standard? Isn't 30 years of PAL more than enough? But let's not have a new system with the old, massive, heavy glass monstrosities that cannot be made with a diameter of one metre. Perhaps plasma, luminescence or liquid crystal? Unfortunately, one is still in the design stage, another cannot be made in a large enough size, and ... All in all, it would seem as if we are stuck with the good old cathode ray tube into the next century. Things looked better a few years ago!

Another problem that is still with us is the charging of dry batteries. Some 'experts' say it's possible, others say it's not; yet others maintain 'perhaps'.

We would all love to save on batteries, with the exception of some battery manufacturers, perhaps. In the erstwhile German Democratic Republic chargers for dry batteries were produced: Telefunken even built them into portable radios, but stopped this later (under pressure from some battery producers?)

Dreams and speculation, motivated by our concern with the environment? Or confusion? The facts are, or appear to be: (1) dry primary batteries cannot be recharged (they are likely to explode), and (2) Union Carbide have been offering the Eveready rechargeable alkaline manganese battery range for some time. It may be that confusion has arisen between primary alkaline manganese batteries, which have been around for a long time, and the (fairly new) rechargeable alkaline manganese batteries.

Rechargeable alkaline manganese batteries use a unique electromechanical system, are maintenance free, hermetically sealed, and will operate in any position. They have been designed for electronic and electrical applications where low initial cost and low operating costs are important.

Rechargeable alkaline manganese batteries can also be used as an alternative to primary batteries since, although their initial cost is higher, they are less expensive overall owing to their recycling property.

They therefore bridge the gap between low initial cost (primary) batteries and the more expensive, but recyclable secondaries (nickel cadmium, zinc-bromine, lithium, and others).

The alkaline manganese battery cannot be recharged as many times as the nickel-cadmium type, but its initial cost is only a small portion of that of an equivalent nickel-cadmium battery.

FOCUS ON: SOLAR ENERGY

Dead-end or The Way Ahead?

The subject solar energy often causes heated debates. Banned as ecological daydreaming by its opponents, solar power technology is hailed as a panacea, along with other forms of alternative energy, by its supporters. As usual, the truth is probably somewhere in between these extremes. An essential condition for an objective viewpoint on solar energy is a basic knowledge of the relevant technology. This is often overlooked or forgotten in many ideologically biased debates. This article presents an overview of solar cell types which are available, and which will become available, and how they may be implemented in solar energy installations. Some attention is also given to present-day battery technology.

By our Editorial Staff

Solar cells are almost exclusively based on silicon as the voltage source. Pure (crystalline) silicon is a semiconductor, a crystal, with a regular structure of atoms which are joined by chemical links. By applying energy, for example, absorbtion of light, it is possible for electrons to be released from their atoms (**Figure 1**). With silicon, the minimum amount of energy (force) needed for the release equals 1.2 eV (approx. 5×10^{-26}kWh).

In as far as it interacts with matter, light consists of a beam of particles (photons) which patter on a surface. The energy of a single photon depends on the wavelength (i.e. colour) of the light: *violet* photons in shortwave light contain more energy than *red* photons in light with a relatively large wavelength. The total power of the radiation is calculated from the number of photons that hit the irradiated surface per unit of time, multiplied by the energy of individual photons. When light is absorbed, *one* photon can only transfer its energy to *one* electron, irrespective of the amount of energy it contains. The only condition for this to happen is that the minimum electron release energy is available.

Solar cells do not consist of pure silicon. The basic material is arranged in layers and purposely polluted (doped) with foreign atoms which have either one electron less (p doping with boron or aluminium) or one electron more (n-doping with phosphor or arsenic) than required for taking up into the silicon crystal structure.

Inside the barrier layer exists an electrical field which drives free charge carriers caused by irradiation to the electrodes of the solar cell.

1

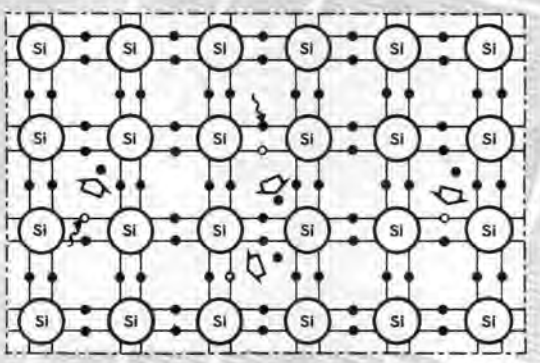

Figure 1. A minimum energy of 5×10^{-26}kWh is needed to 'tear' an electron from a silicon crystal grid.

2

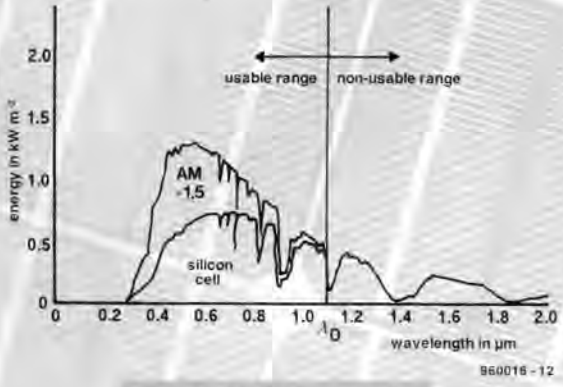

Figure 2. Only a part of the sunlight that reaches the earth surface, the AM-1 and AM-5 spectra, may be used by silicon cells to convert light into electrical energy.

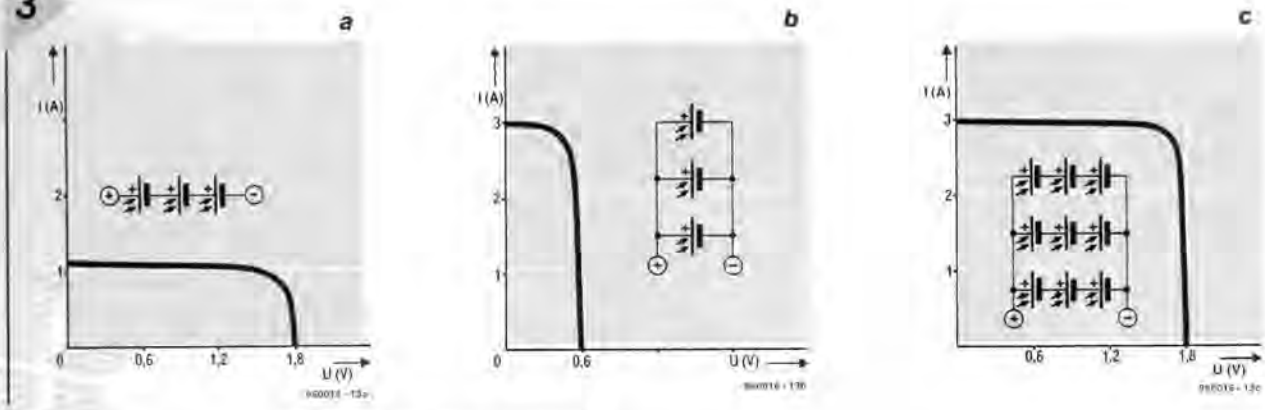

Figure 3. To raise their output voltage, solar cells may be connected in series. Similarly, parallel connection may be used to raise the output current. In many modules, cells are connected in parallel as well as in series.

Unfortunately, the resulting electrical current is rather smaller than might be expected based on the amount of energy that hits the cell surface. The reason is twofold: firstly, only about 50% (max.) of the energy contained in the solar spectrum that reaches the earth can be used for photovoltaic conversion (**Figure 2**). Secondly, the efficiency is limited by such factors as reflections, recombination and other losses. In practice, the overall efficiency of a photovoltaic cell will hardly ever exceed 16%. Higher values of up to 40% are only possible under laboratory conditions.

In general, a distinction is made between three cell types based on silicon:

☼ **Monocrystalline** cells have the highest efficiency (12-15%). These so-called *wafers* are cut from a cylinder-shaped monocrystal and are recognized by their rounded or broken corners, and their smooth blue-grey surface.

☼ **Polycrystalline** solar cells are made from silicon cast in blocks. By controlled cooling of these blocks, relatively large crystallites are created which are at right angles to the cell surface. When the block is cut into discs, the surface is opalescent. Polycrystalline cells may be considered as a kind of parallel configuration of monocrystals. Their efficiency is slightly below that of monocrystalline cells at 10 to 13%.

☼ **Amorphous** silicon is the basic material used for solar cell type with the widest use. With these cells, monosilane (SiH4) is grown in very thin layers on a glass surface. The production process is simple and cost efficient. The silicon layer is totally unstructured, in other words, no crystal is involved. Consequently, the efficiency is relatively low at only 7% (max.). None the less, amorphous cells are well established in low-power applications (watches, pocket calculators), mainly because of their low price. A special problem is formed by long-term stability – in contrast with crystalline cells, the performance of amorphous cells drops after some time, albeit not as quickly as the types manufactured a few years ago.

The main shortcoming of solar cells is the fact that the basic material, silicon, has to be of a purity which is almost beyond imagination. This might strike you as odd considering that the resources for silicon are, in principle, unlimited. Furthermore, the material is non-toxic, environmentally clean, and easy to process. Returning to the subject of purity, the 'pollution' by foreign

An alternative: the photosynthesis cell

About three years ago, Professor Graetzel, a researcher at Lausanne Technical University, proposed the basics of a solar cell which is not based on silicon as an energy converter. Instead, it uses a photosynthetic membrane for the energy conversion, just as plants do! Since the summer of last year, researchers at the Institute for Applied Photovoltaics (INAP) in Gelsenkirchen, Germany, are involved in experiments that should enable this type of energy supplier (converter, actually) to be produced in volume.

The cell, which is also identified as chlorophyll, pigment or nano solar cell, is based on the inexpensive semiconductor dye titan-oxide (TiO_2), which is printed, in paste form, and then sintered on to a glass carrier fitted with a transparent electrode. The large surface created in this way is immersed into a ruthenium dye solution (experiments with chlorophyll were already carried out in the early seventies!), which covers the TiO_2 particles with a monomolecular layer. A liquid electrolyte, iodine/iodide, is sprinkled over the arrangement, which is then covered with a platinum foil (which acts as a catalyst), and, finally, turned into a 'sandwich' construction by securing it to a glass sheet with a transparent electrode.

Light activates the pigment, and causes released electrons to be immediately transferred to the TiO_2 particles. The 'holes' are filled by the iodine solution, which, in turn, draws its electrons from the upper electrode.

Light absorption and charge carrier separation therefore take place in different materials. Because no 'holes' are available in TiO_2, recombination is not possible. Consequently, electrons are allowed to travel freely to the transparent electrode.

The road to mass production of the photosynthesis cell has many obstacles and pitfalls. For example, the dye used till now (the key element in the cell) is not sufficiently stable, and used up after about ten years. Although the ruthenium and osmium derivates are rare, expensive, and required in extremely pure form, it is a fortunate fact that only minute amounts are necessary. A second problem is the aggressiveness of the iodine solution, which tends to corrode adhesives and plastics. In spite of these problems, the INAP researchers hope to be able to produce the first prototype cells with a surface area of 100 cm² and an overall efficiency of about 10% by the end of this year. If this is successful, the first volume production is planned for the year 2000.

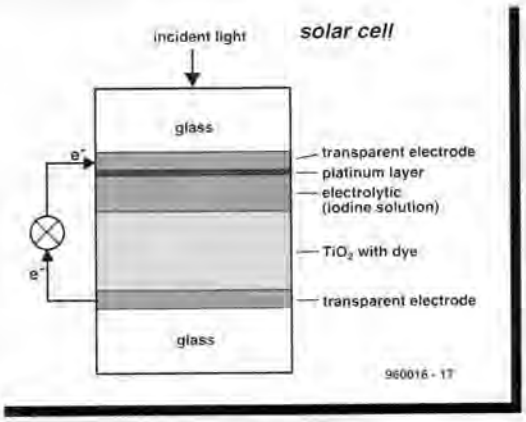

4

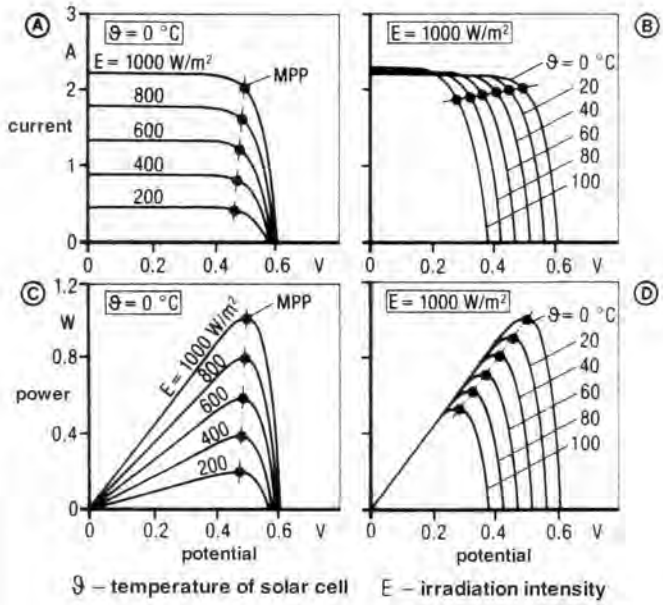

Figure 4. The main characteristics of a solar cell module provide essential information on the maximum power point (MPP).

atoms may nor exceed 1 ppb (parts per billion). The production of silicon with this degree of purity is expensive and complex. This is reflected not only by the cost, but also by small production volumes of crystalline, pure, silicon. A single one-gigawatt solar-cell power station, for example, would use up a fourth of the world year production!

FROM CELL TO MODULE

A single crystalline solar cell supplies a **no-load voltage** of about 0.6 V, independent of its size. A cell made from amorphous silicon produces a slightly higher voltage of about 0.8 V. Under normal circumstances, i.e., assuming a normal cell size of 10×19 cm, the power output is relatively low at 1.2 to 1.4 watt. Consequently, cells have to be joined into solar modules (or panels) before usable currents and/or voltages become available.

As with batteries in a torch-light, cells are connected in series to obtain a higher output voltage. An example of how this is done with three cells is given in **Figure 3a.** Conventional solar modules supply a no-load voltage of between 15 V and 22 V, which indicates that they consist of up to 40 series-connected solar cells.

The size of the cell surface determines the maximum output current, which is usually indicated as the **short-circuit current** (i.e., at an output voltage of 0 V). Available versions range from small amorphous cells with an output current capacity in the micro-amps range, right up to square-metre size modules from monocrystalline silicon with an output short-circuit current rating of more than 5 A. As illustrated in **Figure 3b**, several *identical* modules may be connected in parallel to obtain a higher output current. The output voltage then equals that of a single cell. Finally, it is also possible to resort to a combined parallel-serial configuration, as shown in **Figure 3c**.

Strictly speaking, 20 cells connected in series should be sufficient to charge a 12-V battery. In practice, however, a solid margin should be designed into such a system. Unfortunately, the output voltage of a solar cell is not constant. In fact, it drops with increasing temperature, and decreasing brightness of sunlight. This effect is far more pronounced with polycrystalline cells than with monocrystalline types. Because of this, the voltage characteristics of the relevant cells or modules should be studied before a solar power system is planned and built (**Figure 4**). To achieve the highest possible output power, the cell or module should be operated at the so-called *maximum power point*, MPP, at which the electrical output power reaches its maximum. The MPP shifts with light intensity and cell temperature.

Inside a module, the individual cells are connected in such a way that the lower part of a solar cell is always connected to the upper part of another cell. Professional modules constitute a symmetrical glass assembly with a layer structure: melting adhesive foil, solar cells, melting adhesive foil, glass. High-end frames consist of stainless V4A steel. **Figure 5** shows a Telefunken (Temic) module with poly-crystalline cells and its mechanical structure.

5

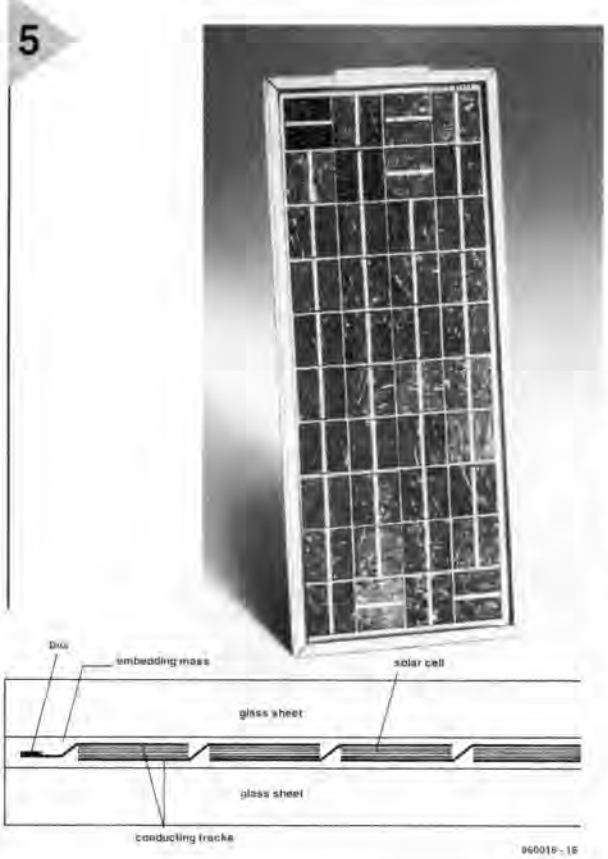

Figure 5. In this way, individual poly-crystalline cells are interconnected to form a module.

MAINS CONNECTIONS AND STAND-ALONE SYSTEMS

Basically, two types of solar power system may be distinguished: the solar system with mains coupling, which feeds its output energy into the 240-V mains system, and the stand-alone system, which serves to supply energy to loads in locations where no mains connection is available.

From an economical point of view, **mains coupled solar systems** do not appear to make sense at first sight. The cost of one kilowatt-hour (kWh) supplied by such a system is between about 80p and £1.40, and that is much higher than electricity generated in the traditional way, i.e., by burning fuels such as coal or gas. Mains coupled solar systems are only viable with heavy government funding and then only after an extended write-off period.

Photovoltaic energy supply is, however, not developed beyond its early stages. Prices of solar modules and ancillaries like mains couplers are

dropping, while the efficiency is constantly improved. In the short term, there will be no end to these developments, because new technologies (for instance, chlorophyll and CIS cells) and mass production give hope of inexpensive and efficient solar cells.

There are no (longer) doubts as regards the *environmental* advantages of solar energy. The claims that solar cells use up more energy in their production than they can ever return during their lifetime have turned out just as wrong as the stories about highly toxic waste materials being left out there during the production and scrapping of solar cells. The facts are that solar energy does not use valuable resources, does not pollute the environment, and does not contribute to the greenhouse effect. Moreover, it promotes decentralized energy supply.

Solar power systems which feed energy into the mains grid are few and far between. For some time to come, the *normal* application of solar cells will be in the **stand-alone system**. These systems are usually marked by one or several actual loads – a bulb in the garden shed, a refrigerator in the caravan, an emergency radio in a remote location such as a mountaineering cabin, or a transponder on board a satellite. Obviously, it is important for the components in these systems to be designed for a specific supply current and a typical supply voltage, while special provisions should be available to ensure continuity of the supply and stability of the supply voltage. All of the planning and design of such a stand-alone system is **user-oriented**, which means that it is accurately tailored to supplying current to users with no connection to the mains grid. Environmental considerations are then secondary.

Energy storage device

Unfortunately, the sun may not shine just when you need electrical energy. The reverse is also true: energy may not always be required when the sun supplies plenty of it! In addition to the solar cell array, a stand-alone system requires another important component: an electrical energy storage device.

The first device that comes to mind for this function is the battery, which is available in many different shapes and structures. Apart from special battery types, including chloride-zinc, iron-sulphide, lithium, nickel-iron, silver-zinc and sodium-sulphur, a number of which are still under development, familiar types such as the lead (gel) acid, NiCd and NiMH batteries are widely used for this purpose. These batteries feature a high and fairly constant capacity, nearly loss-free current acceptance and delivery, and extended durability despite many charging/discharging cycles. Lastly, they are almost maintenance free. The lead plates of special batteries for solar systems have selenium or calcium doping instead of antimony as used in car batteries. These special batteries are marked by high cycle repeatability, excellent charge efficiency, low self-discharging, high immunity against deep discharging and overcharging, and, unfortunately, a high price! Just as with solar cells and modules, batteries may be connected in parallel or in series. When doing so, it is essential to use batteries of the same type, with the same capacity, nominal voltage and charge condition.

Charge controllers

The third elementary component in a solar power system is a control circuit which ensures a reliable and battery-tailored transfer of the energy supplied by the solar cells to the energy storage device.

The simplest solar systems have no control circuit at all. Instead, a **reverse current protection diode** is connected between the module and the battery, as illustrated in **Figure 6a**. The diode prevents the battery from discharging itself through the module when the module receives no light. Unfortunately, the voltage drop introduced by the diode causes considerable losses. These can be kept to a minimum, however, by using a Schottky diode with a low forward voltage drop of 0.3 to 0.4 V (at higher currents, up to 0.7 V).

A much better solution is a dedicated reverse current protection for solar systems such as the 'Battery Regulator for Solar Power System' described in Reference 1. This circuit is based on a MOSFET which enables voltage losses smaller than 100 mV to be achieved.

Basically, real control systems come in three variants: types with series regulation, with parallel regulation, and MPP controls.

With **series regulators**, whose operating principle is illustrated in **Figure 6b**, a switch or a regulating device (adjustable resistor, transistor) is inserted in the current circuit. This is done to limit or interrupt the current that flows into the battery. The series regulator requires a fairly stable supply voltage which is provided by the

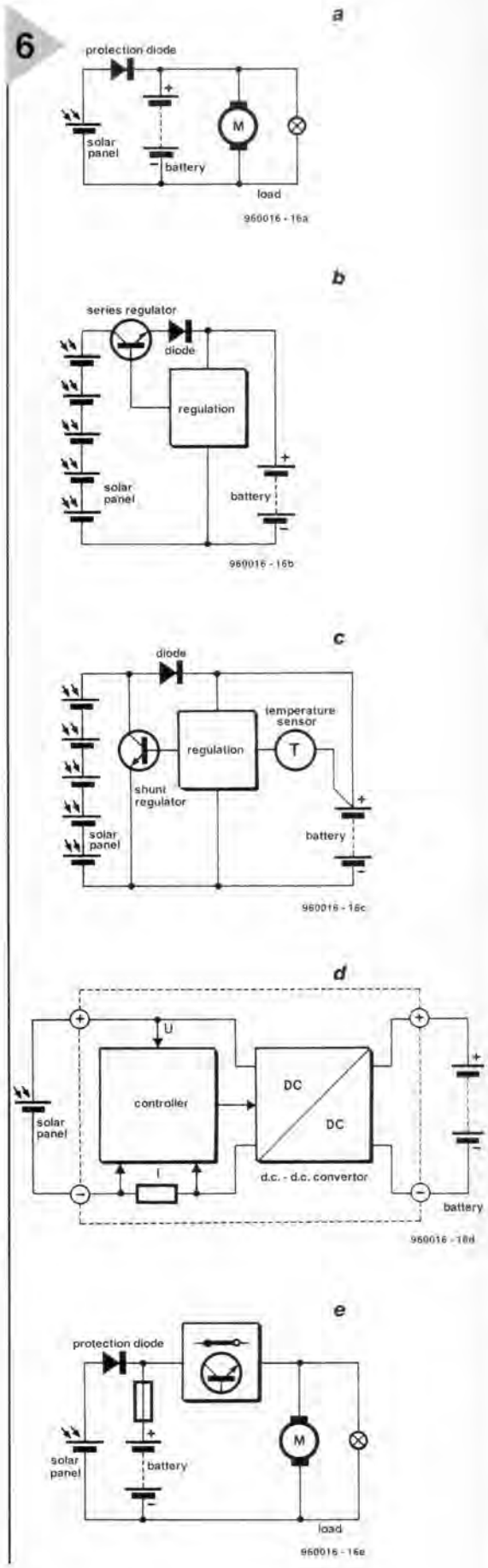

Figure 6. The reverse current protection diode prevents the battery from discharging itself via the solar cell. Irrespective of its operating principle, the control circuit avoids overcharging of the battery. A deep-discharging protection should be integrated in all cases.

An alternative: the CIS cell

A further developed alternative to the silicon photovoltaic cell is based on copper-indium-selenium or copper-indium-sulphide (CIS) technology. The development of these cells has reached the stage where Siemens are actually in the course of preparing for volume production. It should be noted, though, that CIS cells are not environmentally innocent – selenium derivates are toxic, while indium is toxic, rare and expensive. At the Hahn Meitner Institute (HMI) in Berlin, research has been initiated aiming at replacing selenium by sulphur, and indium by molybdenum-sulphide, wolfram-sulphide and wolfram-selenite.

CIS cells have a theoretical efficiency of 28%. In practice, however, a typical performance of 12% is achieved. Industrially manufactured cells may achieve an efficiency of about 16%, which puts them in the same class as mono-crystalline cells. The production methods are simple and familiar from applying layers on glass sheets (layer evaporating): a layer of molybdenum is applied to a glass carrier. This layer acts as the rear electrode (the top electrode consists of transparent, conductive zinc-oxide). Next comes a photo-active CIS layer consisting of several thin layers of indium, copper and, finally, sulphur. Sintering then yields the desired absorbing, photo-active and crystalline layer.

Thanks to their high absorption ability, CIS cells may be kept extremely thin. The material is remarkably stable and very well matched to the solar light spectrum.

The most important disadvantage of the CIS cell is that the CIS layer has to be covered with a layer of highly toxic cadmium-sulphide. This material serves to build up the essential electrical field which enables electrons to be released from their holes. When researchers succeed in finding a replacement, or doping the CIS layer themselves, CIS cells may become serious competitors for silicon cells. Mass production of square-metre size modules is not a problem in any case.

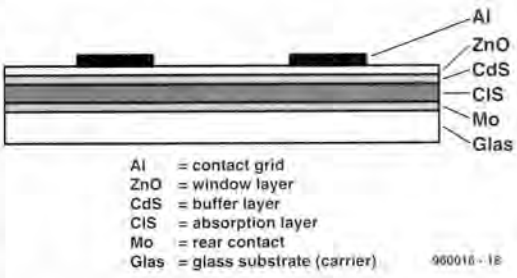

Al = contact grid
ZnO = window layer
CdS = buffer layer
CIS = absorption layer
Mo = rear contact
Glas = glass substrate (carrier)

960016 - 18

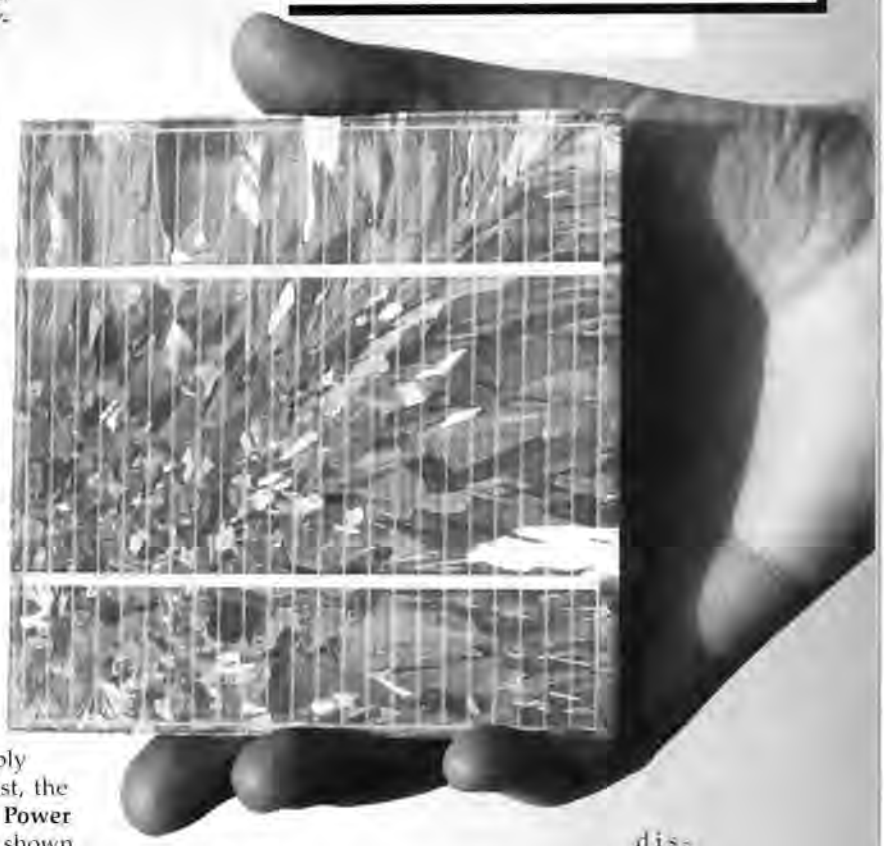

battery. If a relay is incorporated in the circuit, the battery also supplies the hold current. In such a configuration, the voltage loss caused by the relay contact(s) is negligible. If a transistor is used for the switching function, the voltage loss introduced by the collector-emitter junction should be taken into account. Also, the transistor should be able to operate (i.e. switch) at relatively small gate or base currents (for FETs and bipolar transistors, respectively).

By contrast, the **parallel (or shunt) regulator** short-circuits the solar module's output voltage via a switching transistor when the regulator detects a too high voltage at the battery terminals. The principle of operation is illustrated in **Figure 6c**. Because the electrical power is converted into heat, the principle may only be used with relatively small solar power modules. The advantage of the parallel regulator is that it requires almost no energy when it is not active. In fact, the shunt regulator only consumes current when a surplus amount of energy is available from the solar cells.

Like the series regulator, the parallel regulator has a diode in the current circuit. Obviously, this diode also causes some voltage loss. Even low-cost charge controllers available these days use **charge control based on the U-I characteristic**. Essentially, this consists of three phases: normal charging (until the gaseous phase is reached at 14.4 V), full charging (up to 14.9 V) and retention charging (between 13.5 and 13.8 V). The *full charging* phase has been devised specifically for solar batteries. By accurate and careful control of the liquid-to-gas transition, surfacing bubbles ensure that the acids inside the (normally immobile) battery are properly stirred, preventing an early demise of the battery.

The disadvantage of the series and parallel (shunt) regulators are obvious: the 'excess' energy caused by the mismatch between the solar cell and the battery is turned into heat, and simply lost. By contrast, the **Maximum Power Point** regulator shown in **Figure 6d** is designed to attempt to employ the maximum *power* delivered by the solar cell. Unfortunately, an MPP regulator does reduce the efficiency somewhat, and is complex in respect of its electronics because the mathematical product of current and voltage has to be computed all the time to enable the circuit to perform the required control actions. In practice, the advantages of MPP regulators are only substantial in larger systems, say, with an output power of 200 watts and more.

A good charger in a solar power system should also feature a **deep discharging protection** which interrupts the current flow when the loads have discharged the battery down to its discharging minimum of about 11 V. The main component in such protection circuits is generally a switching transistor or a relay.

(960016)

Reference:
1. Battery Regulator for Solar Power System, *Elektor Electronics* July/August 1992, p. 54.

surround-sound subwoofer

Part 3 (final)

After the detailed descriptions of the passive and active versions of the subwoofer in the previous two instalments, this third and final part deals with the complete construction. If the enclosure has already been built on the basis of Figure 5, only the printed-circuit boards need to be completed and built into the enclosure together with the drive unit.

The circuits shown in Figures 10 and 11 (Part 2), including the power supply for the cross-over filter in Figure 10, are intended to be built on the three printed-circuit boards shown in **Figure 12.** The three sections shown in the illustration are easily separated from one another by cutting or snapping off along the indicated lines. The power supply for the power amplifier will be described later in this instalment.

Building the filter board is straightforward, as one would expect with only three ICs, a handful of resistors, and some capacitors on a good-sized board. Make sure to fit the six wire bridges first. Rotary switch S_1 may be mounted directly on to the board. Connect the two leds and switch S_2 to the board via short lengths of stranded circuit wire (7/029).

The ±15 V power supply for the filter does not take much more space than a box of matches. Since the filter draws only a modest current, the mains transformer can be kept small (1.5 VA). The voltage regulators need not be cooled. Connect terminals '+', '0' and '–' to the corresponding terminals on the filter board via short lengths of stranded circuit wire. The mains voltage from the central mains entry is connected to the supply via terminal block K_1.

Populating the power amplifier

Parts list:

FILTER

Resistors:

R_1, R_2 = 470 kΩ
R_3, R_4 = 22 kΩ
R_5 = 18 kΩ
R_6, R_{11} = 15 kΩ
R_7 = 820 Ω
R_8 = 1 kΩ
R_9, R_{37} = 2.7 kΩ
R_{10} = 8.2 kΩ
R_{12}, R_{38} = 6.8 kΩ
R_{13}, R_{17}, R_{21} = 6.65 kΩ, 1%
R_{14}, R_{18}, R_{22} = 5.36 kΩ, 1%
R_{15}, R_{19}, R_{23} = 4.42 kΩ

board is straightforward, but a few aspects need to be watched. Firstly, transistors T_1–T_3 must be fitted at the track side of the board. These devices, together with T_4–T_7, must be screwed to one and the same heat sink, in each and every case with the aid of insulating washers and bushes. To ensure maximum heat conduction, apply heat conducting paste to both sides of the washers for the IGBTs.

Secondly, as described in the previous instalment, the collectors of T_4–T_7 provide the output current in unison. To ensure that the transfer resistances are kept small and at the same time that the board does not become unduly warm, the connection between the collectors and the output relay is rather unusual. Immediately adjacent to the collector terminal is an additional hole on the board into which a solder pin is to be inserted (at the track side). The four pins must be interconnected by heavy-duty single-strand copper wire (≥ 1.5 mm²) or

12

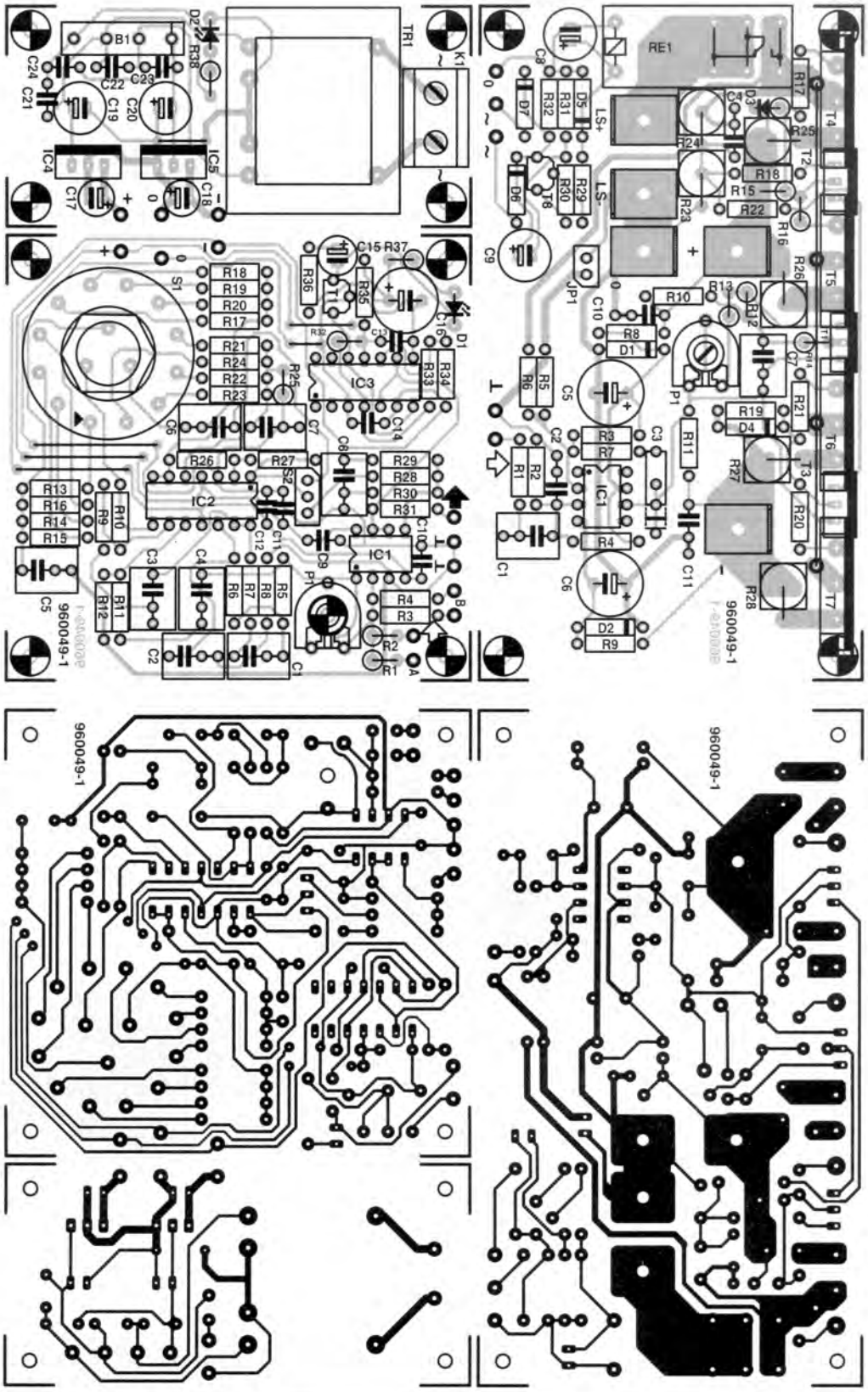

Figure 12. Because of the relative simplicity of the circuits, the amplifier and filter can be accommodated on one board; it is, however, advisable to separate the boards.

R_{16}, R_{20}, R_{24} = 3.83 kΩ
R_{25} = 10 MΩ
R_{26}, R_{27} = 2.2 kΩ
R_{28} = 10 kΩ
R_{29} = 4.7 kΩ
R_{30} = 1 MΩ
R_{31}, R_{35} = 100 Ω
R_{32}, R_{34} = 14.0 kΩ, 1%
R_{33} = 2.00 kΩ, 1%
R_{36} = 15 Ω
P_1 = 47 kΩ preset potentiometer

Capacitors:
C_1, C_3, C_6 = 2.2 μF, metallized polyester, pitch 5 mm
C_2, C_9–C_{14} = 100 nF
C_4 = 470 nF, metallized polyester, pitch 5 mm
C_5 = 820 nF, pitch ≤ 7.5 mm
C_7 = 120 nF
C_8 = 680 nF
C_{15} = 47 μF, 25 V, radial
C_{16} = 470 μF, 25 V, radial
C_{17}, C_{18} = 10 μF, 63 V, radial
C_{19}, C_{20} = 220 μF, 25 V, radial
C_{21}–C_{24} = 47 nF, ceramic

Semiconductors:
D_1, D_2 = LED, low current
B_1 = B80C1500
T_1 = BC640

Integrated circuits:
IC1 = NE5532
IC2 = TL084
IC3 = LM319
IC4 = 7815
IC5 = 7915

Miscellaneous:
K_1 = 2-way terminal block, pitch 7.5 mm
S_1 = rotary switch, 3-pole, 4-position, for board mounting
S_2 = single-pole change-over switch
Tr_1 = mains transformer, 2×15 V, 1.5 VA
PCB Order no. 960049

Parts list:

AMPLIFIER

Resistors:
R_1, R_5, R_{13} = 1 kΩ
R_2, R_6 = 31.6 kΩ, 1%
R_3, R_4 = 8.2 MΩ (see text)
R_7 = 100 kΩ
R_8, R_9 = 3.3 kΩ, 0.5 W
R_{10}, R_{11} = 22 kΩ
R_{12} = 3.3 kΩ
R_{14} = 68 Ω
R_{15}, R_{19} = 220 Ω
R_{16}, R_{17}, R_{20}, R_{21} = 100 Ω
R_{18}, R_{22} = 22 Ω
R_{23} = 220 Ω, 5 W
R_{24} = 680 Ω, 5 W
R_{25}–R_{28} = 0.22 Ω, 5 W
R_{29} = 390 Ω
R_{30}, R_{31} = 47 kΩ
R_{32} = 5.6 kΩ
P_1 = 2.5 kΩ preset potentiometer

Capacitors:
C_1 = 270 nF
C_2 = 3.3 nF
C_3 = 22 pF, 160 V, polyester
C_4 = 1 nF
C_5, C_6 = 220 μF, 63 V, radial
C_7 = 2.2 μF, metallized polyester, pitch 5 mm
C_8 = 47 μF, 50 V, radial
C_9 = 100 μF, 40 V, radial
C_{10}, C_{11} = 100 nF

Semiconductors:
D_1, D_2 = 18 V, 1.3 W zener
D_3, D_4 = 10 V, 1.3 W zener
D_5–D_7 = 1N4004
T_1 = BD139
T_2 = MJE15030 (Motorola)
T_3 = MJE15031 (Motorola)
T_4, T_5 = GT20D201 (Toshiba)
T_6, T_7 = GT20D101 (Toshiba)
T_8 = BC640

Integrated circuits:
IC_1 = AD847JN (Analog Devices)

Miscellaneous:
JP_1 = 2-way contact row and jumper, or wire bridge
Re_1 = relay, 16 A, 24 V, 875 Ω (e.g., Siemens V23056-A0105-A101)
LS_1 = drive unit, see text
5 off flatcable (car-type) connectors with screw fitting
1 off heat sink for T_1–T_7, <0.55 K W^{-1}, e.g. SK47/100 SA (Fischer, available from Dau Ltd 01243 553 031)
Insulating kits (washers; bushes) for T_1–T_7
PCB as for filter (see text)

13

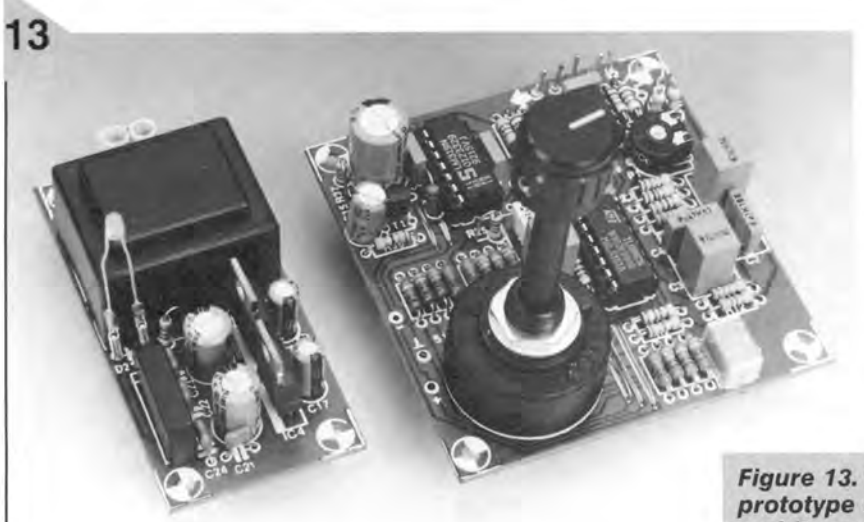

Figure 13. Completed prototype of the filter and its power supply.

a narrow strip of thin copper plate. It hardly needs emphasizing that thorough soldering of these parallel links is a prime requirement.

Furthermore, in order to ensure that the copper tracks for the supply lines and loudspeaker connections are not longer than strictly necessary, they are not taken to the edge of the board as is usual. Instead, the relevant solder pads are at the centre of the board and have been designed to allow flatcable (car-type) sockets to be screwed to them, preferably at the track side. Solder tags may be used, but these are nowhere near as robust as car connectors, which must, therefore, be preferred.

Three final remarks. (1) When populating the amplifier board, do not (yet) fit resistors R_3 and R_4; why will be discussed shortly.

(2) Wire bridge JP_1 provides the necessary link between the negative power supply line and earth; it should, however, not be fitted if such a link is already present in the power supply itself. (3) Turn preset potentiometer P_1 fully anti-clockwise.

Figures 13 and **14** show the completed prototype boards. Moreover, **Figure 15** shows the underside of the power amplifier module, which gives a good view of T_1, T_2 and T_3, the flatcable connectors for the supply lines and the loudspeaker connections, and the voltage rail that links the collectors of T_4–T_7. Note that this rail in the prototype consists of a folded strip of copper plate.

AMPLIFIER POWER SUPPLY AND CALIBRATION

The power amplifier needs a symmetrical supply of ±49 V. The design of the supply may be simple, but it should ensure the provision of sufficient current. The design shown in **Figure 16** is advised, since a transformer of 2×35 V at 300 VA, a 35-A bridge rectifier and four 10 000 μF, 63 V

14

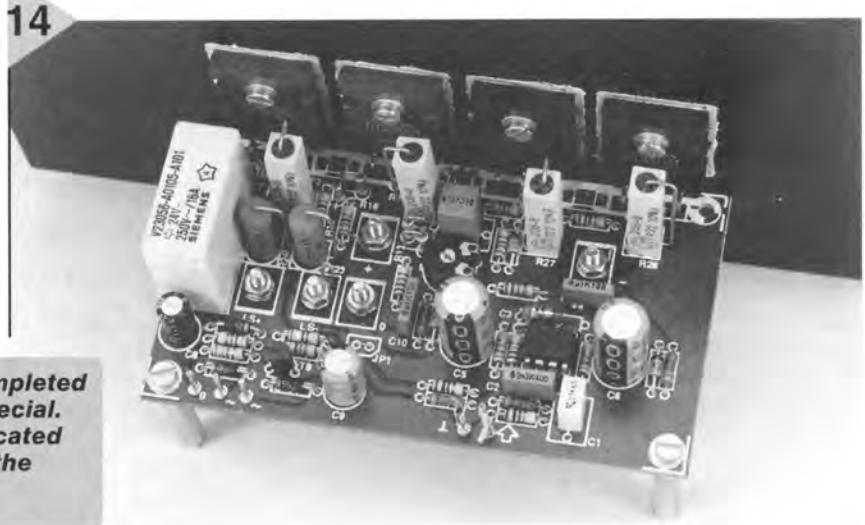

Figure 14. The top view of the completed amplifier board shows nothing special. The four output transistors are located together and well insulated from the heat sink.

electrolytic capacitors are fully up to the required task. The series resistors, in conjunction with the electrolytic capacitors, effectively decouple the supply lines to the amplifier.

As shown in Figure 16, the power-on delay circuit for the loudspeaker is supplied directly from the secondary windings of the mains transformer. If desired, a mains switch-on delay circuit, similar to that described on page 19 of our September 1995 issue, may be included at the primary side of the mains transformer.

Thoroughly check the amplifier board before commencing with the calibration. Provisionally connect the power supply and check that the potential across zener diodes D_1 and D_2 is about 18 V. If this is so, the setting of IC_1 is correct and it may be assumed that the remainder of the amplifier is also all right.

Reverting to R_3 and R_4: these resistors are intended to compensate the bias current of IC_1 to ensure that there is no direct voltage at the amplifier output. Check this by measuring the voltage, U_C, at pin 3 of IC_1 with a high-impedance voltmeter (multimeter) set to a millivolt range. The value of the resistors is calculated by

$$R_3 = R_4 = (18/U_C) \times 31.6 \times 10^3. [\Omega]$$

In the prototype, the bias current through R_2 is 2.2 μA, which results in a voltage at the non-inverting input of IC_1 of 70 mV. Substituting this in the foregoing formula gives a value of the compensating resistors of 8.2 MΩ as specified in Figure 11. Note that the current levels may differ appreciably from one AD847 to another.

Set the quiescent current, which should be 100 mA through each of the output transistors. This is done by connecting a voltmeter or multimeter set to the 100 mV range across one of resistors R_{25}–R_{28} and gently turning P_1 clockwise until the meter reads 22 mV. Leave the amplifier on for about an hour and measure the voltage again; adjust P_1 as required. Finally, check that the voltage drop across the other three resistors is the same.

FINALLY ...

The construction of the wooden loudspeaker enclosure has already been described in Part 1. It is now time to select a metal case for the filter, amplifier and amplifier power supply. Note that it is important that the heat sink of the power amplifier remains on the outside so that it is in cooling ambient air.

It is best to mount the filter on spacers directly at the back of the front panel of the case so that rotary switch S_1 is readily accessible. Phase selector S_2, overdrive indicator D_1 and on/off indicator D_2 must also be mounted on the front panel. Drill a small hole in the relevant position to make the subwoofer's sound level control P_1 accessible for adjustment. It is, of course, possible to use a standard potentiometer for P_1, mount this on the front panel, and connect it to the board with two short lengths of stranded circuit wire.

Construction of the amplifier power supply should not present undue difficulties, but it should be robust. The transformer may be

15

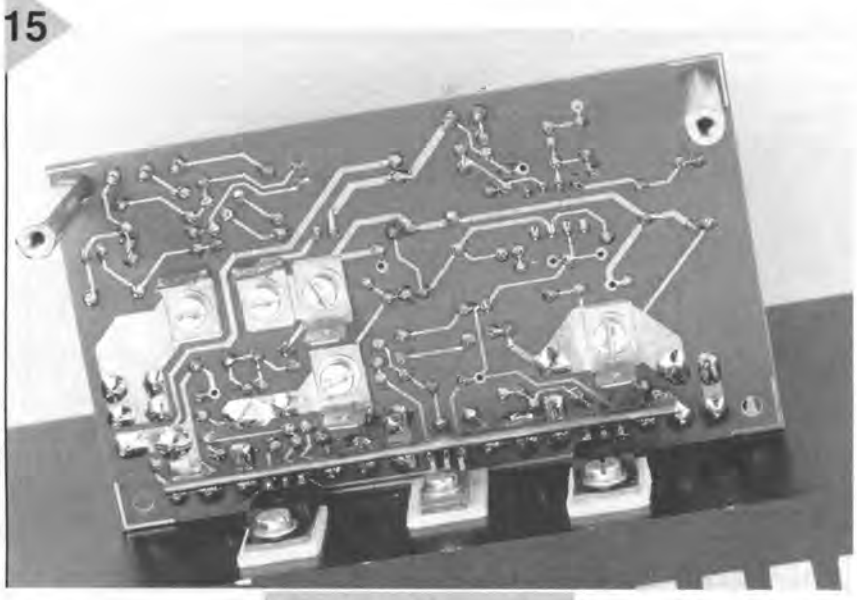

Figure 15. The underside of the completed amplifier board shows T1, T2 and T3, as well as the flatcable (car-type) connectors. The collectors of T4–T7 are interconnected with the aid of solder pins and a narrow strip of thin copper plate.

Different drive unit?

Although in the previous instalments reference has been made to a number of drive units, the preferred one remains the Monacor, since it gives excellent performance and offers very good cost-to-quality ratio. However, as mentioned in Part 2, even this otherwise excellent unit suffers from a deficiency. Although this deficiency is not serious, some readers may, none the less, be interested to know that we have found yet another drive unit that is suitable for the subwoofer. Finding alternative drive units is not easy since their parameters tend to differ to such an extent that changes to the dimensions of the enclosure and to the bass reflex tuning are often required.
The alternative is the Type 30WD300 from Vifa. This is also a 300 mm woofer that fits

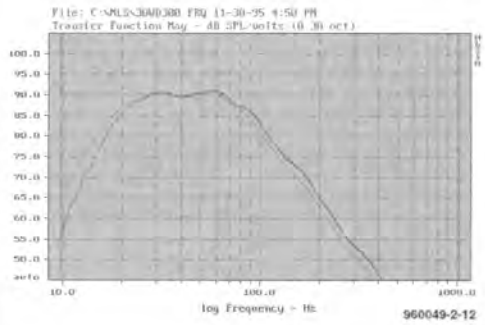

readily into the enclosure described in Part 1 and which can use the same filter as the other drive units. The characteristics in the illustration show that there are some differences between it and the Monacor unit, but that these are of not much consequence. The solid curve refers to the Vifa unit, and the dashed one to the Monacor unit.

The 30WD300 produces no spurious sounds and has an excellent overall performance. Unfortunately, like the Radio Shack and Parts Express units, it does not have a double voice coil, which makes it unsuitable for use in the passive version of the subwoofer. Used in the active version, it has a small benefit in that, because of its higher impedance, it requires a lower current from the power amplifier. This in turn means that the mains transformer may be a (less expensive) 225 VA type (and the fuse rating can be reduced to 1 A). On the other hand, the Vifa unit is dearer than the Monacor unit, so the choice is yours.

screwed to the bottom of the case and the remainder on a small sheet of prototyping board. The connections between the secondary windings of the transformer, the bridge rectifier, the capacitors and resistors should be in heavy-duty, single-strand copper wire. The negative supply line shown bold in Figure 16 must be kept as short as possible. It is best to take the capacitor terminals and the centre tap of the transformer to a common point (star connection). The bridge rectifier must be mounted on a small heat sink or be screwed directly to the bottom of the case.

As far as the interconnections are concerned, those between the filter supply board and the filter board have already been discussed, as have the operating controls of the filter. Connect the high-level and line-level input pins to a couple of audio sockets via single screened audio cable. The output of the filter should be taken also via single screened audio cable to the input of the power amplifier (if the length of this cable is only a few centimetres, stranded circuit wire may be used instead of screened cable).

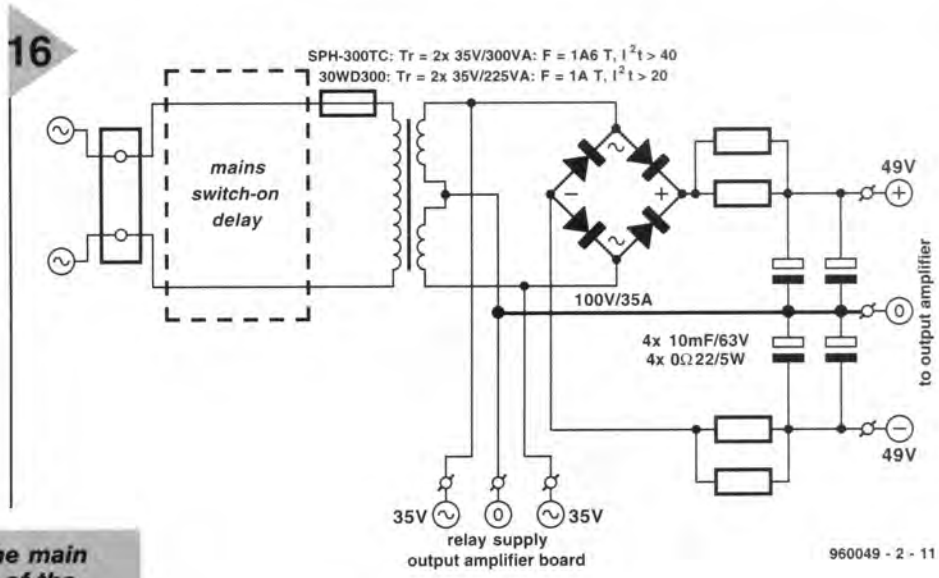

Figure 16. The main requirement of the amplifier power supply is the ability to deliver sufficient current.

The connections that need most attention are those between amplifier and amplifier power supply, and between amplifier and loudspeaker. The amplifier delivers an appreciable power output, so that the connections must be able to handle fairly large currents, while the transfer resistances must be kept to a minimum. It is, therefore, recommended to use cable with a cross-sectional diameter of $\geq 2.5\ mm^2$. Connect the amplifier power supply via three lengths of this cable, preferably terminated into car-type flat connectors to terminals '+', '0', and '–' on the amplifier board. Connect the loudspeaker (with the two voice coils connected in parallel) via two lengths of the same cable to terminals '+LS' and '–LS' on the amplifier board.

Connect the primary of both mains transformers via heavy-duty, well-insulated cable to the mains entry at the rear of the case. Use a good-quality mains entry with integral fuse holder and on/off switch.

Alteration of range of S_1

Cross-over frequency	Values of resistors (kΩ)			
	R_{13},R_{17},R_{21}	R_{14},R_{18},R_{22}	R_{15},R_{19},R_{23}	R_{16},R_{20},R_{24}
80 Hz	3.32			
90 Hz		2.94		
100 Hz			2.67	
110 Hz				2.43

Which cross-over frequency?

The setting of P_1 and S_1 can be found empirically only: there are no definite rules, since it is really a question of personal preference. Knowing the lower frequency limit of the existing loudspeaker system, either though personal measurement or from manufacturers' data, is a help, however, since the cross-over frequency of the subwoofer can then be chosen close to this limit.

The cross-over frequency chosen in the prototype is different from that found in many popular satellite or subwoofer systems. This is because such systems normally use small drive units that can just about handle 100–150 Hz, which means that the central bass unit must take over at that frequency. The present subwoofer is meant really as an addition to normal full-range loudspeaker systems, that is, compact to medium large loudspeaker enclosures that give a reasonable bass performance, but do not perform so well at the lower bass range. Position '70 Hz' will prove fine in use with most bookcase-type loudspeakers, while with compact loudspeakers '60 Hz' will normally the best value. Cross-over frequencies 40 Hz and 50 Hz are intended for combination with medium to large loudspeaker enclosures. The two lower frequencies, 30 Hz and 20 Hz, are usually best for use with electrostatic loudspeakers to give the 'thin' bass of these units rather more 'punch' at the lower end.

If your stereo loudspeakers are rather small, we can imagine that you will find the cross-over frequency chosen for the prototype rather low and would prefer to use the standard frequency for satellite/subwoofer systems. This is possible by altering the values of resistors R_{13}–R_{24} as shown in **Table 1** for frequencies 80 Hz, 90 Hz, 100 Hz and 100 Hz. These alterations do not affect the amplifier or the loudspeaker. [960049]

64-channel logic analyser

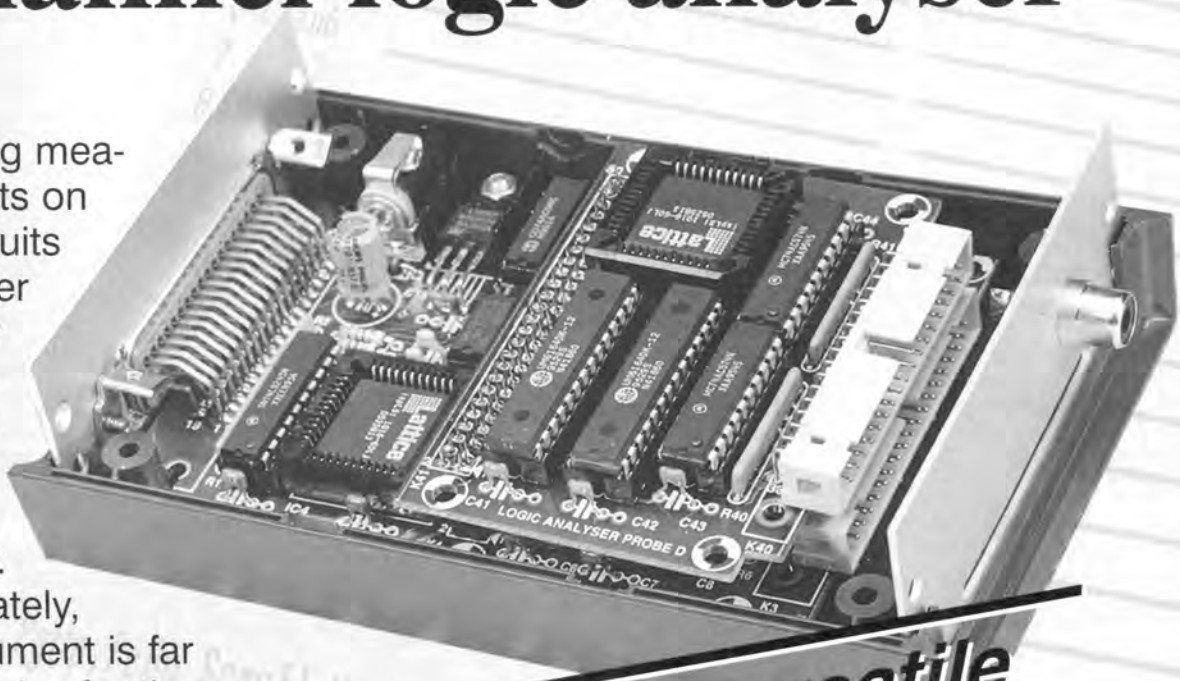

compact, versatile and low-cost

Performing measurements on digital circuits the proper way is really only possible with the aid of a logic analyser. Unfortunately, that instrument is far too expensive for the hobbyist. No longer, however, because we present one for home construction. As you may recall, the winning circuit in our 1995 International Circuit Design Competition was an excellent design for a compact logic analyser. The *Elektor Electronics* laboratory staff have fine-tuned this design to enable it to be published as a full-blown construction project, complete with printed circuit boards, software and programmed ICs available through our Readers Services.

Design by L. Lamesch

Logic analysers are complex instruments that serve to monitor and record digital signal levels at a large number of inputs, quasi-simultaneously. With the aid of a high sampling frequency (up to 50 MHz in this design), bit patterns are stored sequentially in the analyser's memory. Once the memory is full, its contents may be read and evaluated. Professional logic analysers use a display for that purpose. Unfortunately, their price tag of £1k and up puts them well outside the range of the hobbyist and small laboratory worker. The professional logic analyser is the instrument *par excellence* for specialised system developers. The logic analyser proposed in this article is compact, has up to 64 input channels, and a sampling frequency of up to 50 MHz. Moreover, all the calculations and processing of collected data is performed by a regular IBM or compatible PC. This allows the circuit to be kept simple and, consequently, relatively inexpensive.

The sampling frequency may be reduced, if necessary, with the aid of a programmable divider which supplies a scale factor between 2^0 (1) and 2^6 (64). It is possible to use a clock signal supplied by an external source, for example, the system clock of the circuit under test. Here, too, a maximum of 50 MHz applies.

The circuit is designed for use in combination with an MS-DOS PC. The acquired data is copied from the logic analyser's memory to the PC via the printer port. Next, the software ensures that the measurement results are displayed on the computer screen.

Thanks to the compact layout (achieved by using PLDs) and the relatively low current consumption, the instrument is highly suitable for use with a laptop computer in 'field' applications.

Main Specifications

Inputs:	*16, 32, 48 or 64*
Input level:	*TTL*
Buffer depth:	*4,096 samples*
	trigger point in centre
Clock signal:	*internal or external*
Clock frequency:	*50 MHz (internal)*
	50 MHz (external)
Divisor:	*adjustable between 2^0 and 2^6*
Trigger word:	*programmable*
Trigger time:	*programmable*
Interface:	*to PC printer port*
Software:	*MS-DOS compatible*
System requirements:	*80386 or better, VGA*
Supply voltage:	*9-12V at 400-1,000 mA*

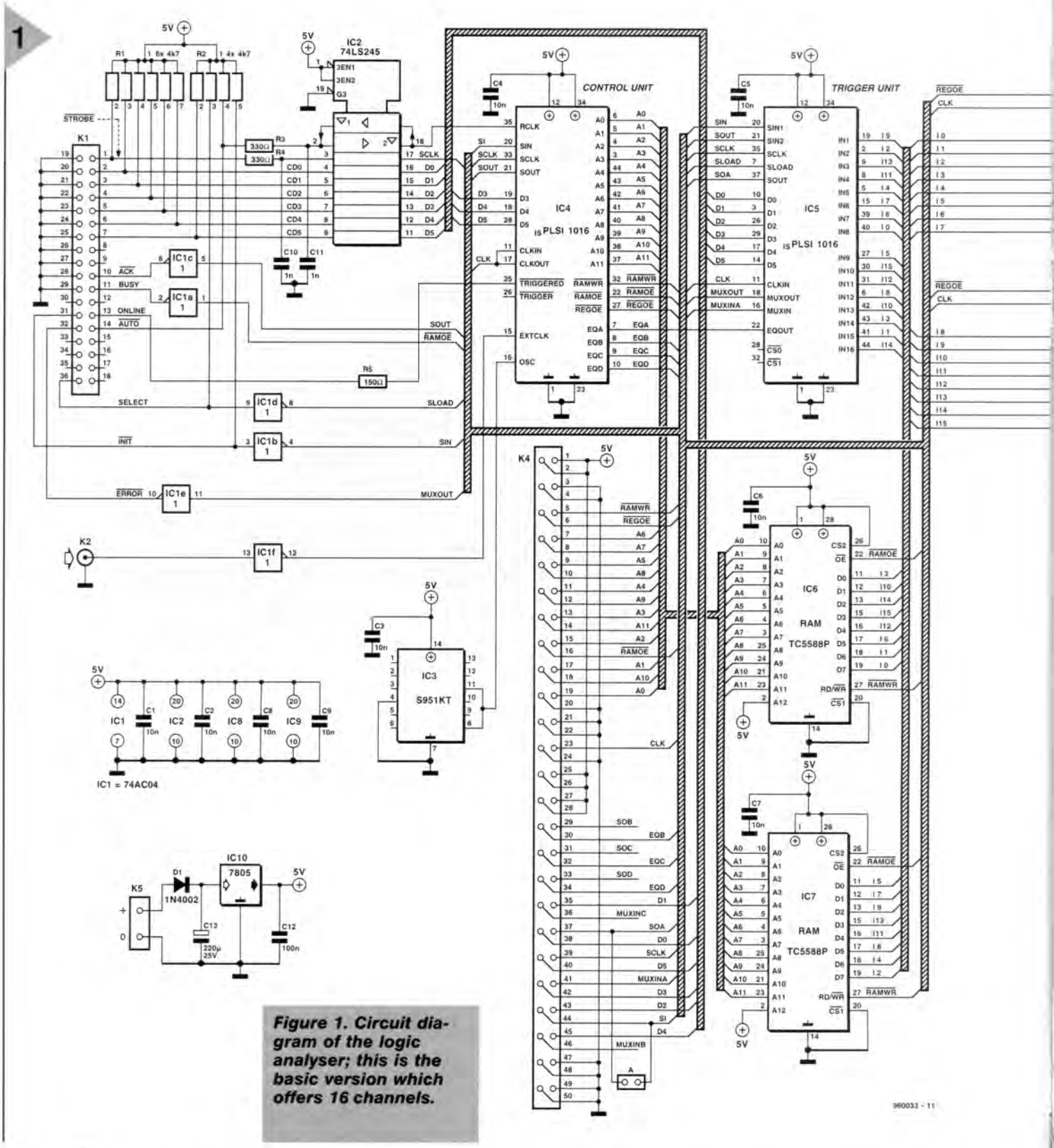

Figure 1. Circuit diagram of the logic analyser; this is the basic version which offers 16 channels.

THE APPROACH

The schematic of the basic circuit is shown in **Figure 1**. The structure is easily traced back to the original as we received it from the author as his entry for the Design Competition. In spite of the impressive performance, the basic circuit still contains less than 30 components, one of the famous (did anyone say notorious?) rules for the Design Competition.

The connection between the logic analyser and the PC is established via the Centronics printer port. This port is wired to connector K1, and buffered by IC2, a 74LS245. The serial communication takes place via give buffers (in IC1,a 74AC04) which are connected to the Centronics control signal lines Acknowledge, Busy, Init, Select and Error.

An important role is played by two programmable building blocks type (is)pLSI1016. They act as the trigger and control unit. The basic circuit is shown by the schematic. A brief discussion on the internal structure and essential operation of these devices may be found in the inset elsewhere in this article.

To the right in the circuit diagram you see the analyser's logic inputs arranged on connector K3. Further, the input circuit contains the trigger unit, two eight-bit input registers and two fast SRAMs (static random access memories). The digital inputs have 10-kΩ pull-up resistors, and are connected directly to two latches (registers) type 74AC574 (IC8 and IC9). The

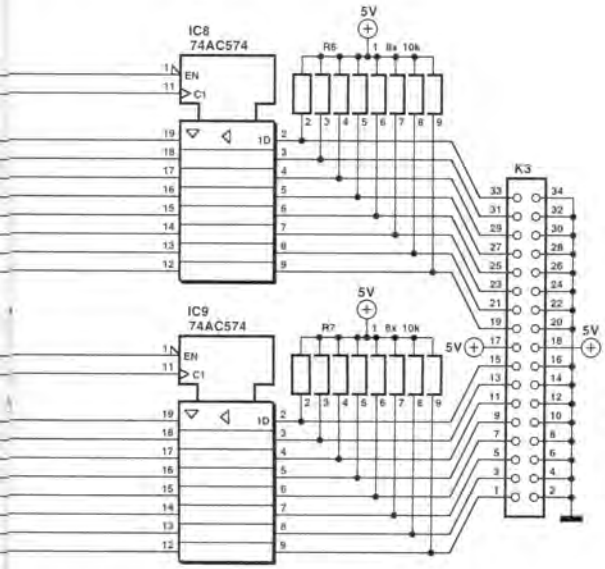

16 digital output signals supplied by these registers (I0 through I15) are applied to the inputs of the trigger unit (IC5) and the data inputs of static cache memories IC6 and IC7.

The trigger unit, IC5, contains a 16-bit comparator which compares selected bits from the input word with a programmed bit pattern. If the result of the comparison is positive, output EQOUT of IC5 becomes active (logic 1). The compare and masking bits are available in a shift register contained in the trigger unit which is loaded serially from the PC using signals SCLK, SIN1 and SLOAD. If the logic analyser is equipped with extension modules, the circuit contains one long shift register which extends across all ispLSI1016s used in the instrument. The SOUT output may be used by the PC, if necessary, to read back the contents of the serial registers for further checking and detection of the probes.

The trigger module also contains a multiplexer which is used by the PC to put all SRAM databits in serial format on the MUXOUT line, when it reads the memory. The multiplexer inputs are selected with the aid of lines D0-D5.

The analyser's working memory consists of two fast static cache memories type TCP5588-P. These feature an internal organisation of 4,096×8 bits, and an access time of 12 ms.

The control unit programmed into an ispLSI device (IC4) contains a RAM address counter and the complete control of the logic analyser. The control includes the read and write signals to and from the RAMs and the buffers. To enable the state machine to be initialised by the PC, the PLD contains a register which copies (latches) the levels at inputs D3, D4 and D5 on the rising edge of the RCLK signal.

Whenever the an extension board is added to the main board, the analyser is effectively extended with one trigger unit consisting of an ispLSI 1016, two input registers and two SRAMs. The circuit diagram of the (optional) extension unit is given in **Figure 2**. Up to three of these extensions may be used. Each adds 16 channels.

As already mentioned, the circuit structure is such that the shift registers of all PLDs used are effectively cascaded, i.e., connected in series. The extension cards should, therefore, form one large loop. Hence, the board layout is slightly differently for each extension. The difference between the extension units is indicated in the circuit diagram. Input SIN1 is linked to the serial output of the previous unit. In this arrangement, SIN1 of module B receives the signal marked SOA (serial out module A). Likewise, the SOUT output of module B supplies signal SOB, which is fed to the SIN1 input of module C. In the same way, the remaining module is taken up in the chain. The serial output signal of the last module is connected to the SIN input of IC4 on the main board. To enable the user to 'customize' the instrument (16, 31, 48 or 64 inputs), a jumper should be installed on the last extension module in the chain. The jumper ensures that the serial output signal is fed to the SIN input of IC4. If no extension module is used, jumper A should be fitted on the main board. You can't add extensions arbitrarily –only combinations A, AB, ABC or ABCD are possible.

The multiplexers contained in the ispLSI devices are also cascaded. Hence, the MUXOUT output of any module is always connected to the MUXIN input of the previous module in the chain. The probes are selected with the aid of CS0 and CS1.

Control unit

The internal structure of the programmed ispLSI1016 used for the control the logic analyser is shown in **Figure 3**. By putting pulses on the SCLK input, data at the SIN pin may be shifted into the shift register. The last two bits (SR0 and SR1) determine which oscillator source is selected: the internal 50-MHz oscillator, or an exter-

About the ispLSI1016

The ispLSI1016 from Lattice is a programmable logic device (PLD) which contains 96 registers, 32 universally applicable I/O lines, four advanced inputs, three clock inputs and a network that governs all internal links (Global Routeing Pool). All inputs and outputs are TTL compatible. Each input/output is capable of sourcing a current of up to 4 mA, or sinking up to 8 mA. The maximum clock frequency at which the chip can operate depends on the type (max. 90 MHz).

The most interesting feature of the LSI family of programmable components is that they may be programmed in a simple way, without expensive ancillaries, and even directly in the circuit. Hence their full name: in-system programmable Large Scale Integration (ispLSI).

Centrally located in the component are the sixteen Generic Array Blocks (A0 through A7, B0 through B7). Each logic block has 28 inputs, a programable AND/OR/XOR array, and four outputs which may be set up to function as latches or as combinational logic.

All inputs of the Generic Logic Block (GLB) originate from the Global Routeing Pool (GRP). All GLB outputs are fed back again to the GRP, enabling them to be applied to the inputs of other GLBs.

The inputs of the 32 I/O cells may be programmed to function as latches, combinatorial logic, or registers. Moreover, the cell may be configured as an output or a bidirectional terminal with three-state mode.

The combination of eight GLBs, 16 I/O cells and an Output Routeing Pool forms a so-called Logic Megablock. One ispLSI chip contains two such Megablocks.

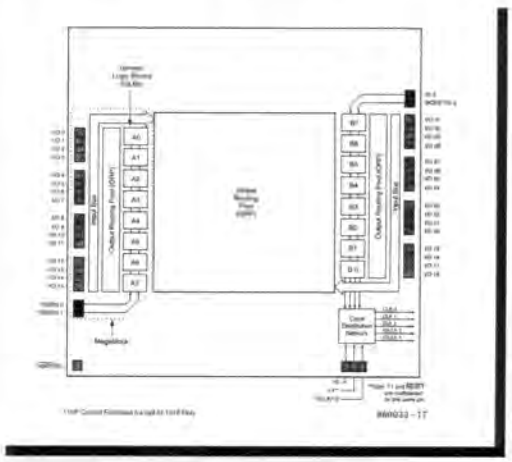

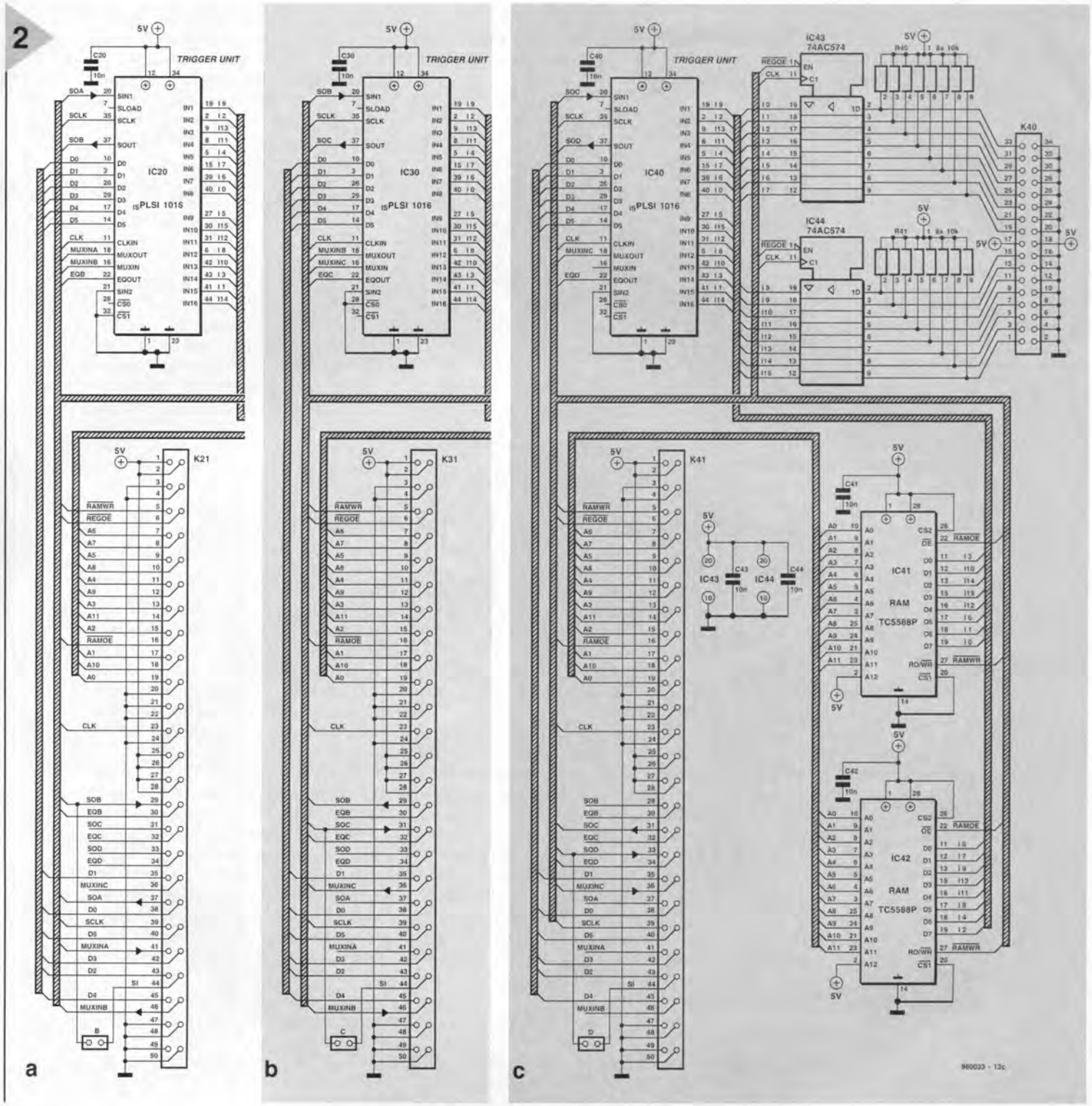

Figure 2. Circuit diagram of the three (optional) channel extension modules. If all three are used, the analyser sports 64 input channels.

nal source. The latter may be inverted to achieve better synchronisation with the external signals. The next four bits, SR2, SR3, SR4 and SR5, determine the scale factor for the divider, so that eight different sampling periods, ranging from 20 ns to 2.56 µs, may be selected. Drive signal PCCLKEN switches off the internal divider, and allows the PC to determine the clock frequency via the input marked PCCLK. The result of the division, the CLKOUT signal, is fed back externally to the CLKIN input. Via that route, the sampling frequency is also copied to the trigger modules.

Bits TCNTD0, TCNTD1, TCNTD2 and TCNTD3 contain the number of periods during which the trigger condition has to exist before it is recognized as valid. During sampling, this value is continuously loaded into the down counter as long as no valid trigger condition is available. If the signal 'trigger' goes high and remains high, the counter is allowed to count down to 0, and thus start the second measurement cycle.

The measurement proper may be subdivided into three phases: the period before the trigger instant (pre-trigger), the actual trigger instant, and the period after the triggering (post-trigger). The state diagram shown in Figure 3 explains the process as it evolves as a result of parameter changes.

The states are counted down by a 3-bit counter in such a way that each bit is endowed with a logic meaning. The following signals may be distinguished: SAMPLE, TRIGGER and TRIGGERED. At the start of each measurement, these signals are reset by the RUNSTOP signal. The first clock pulse ensures that the system arrives in state '1'. There, the software waits until the trigger condi-

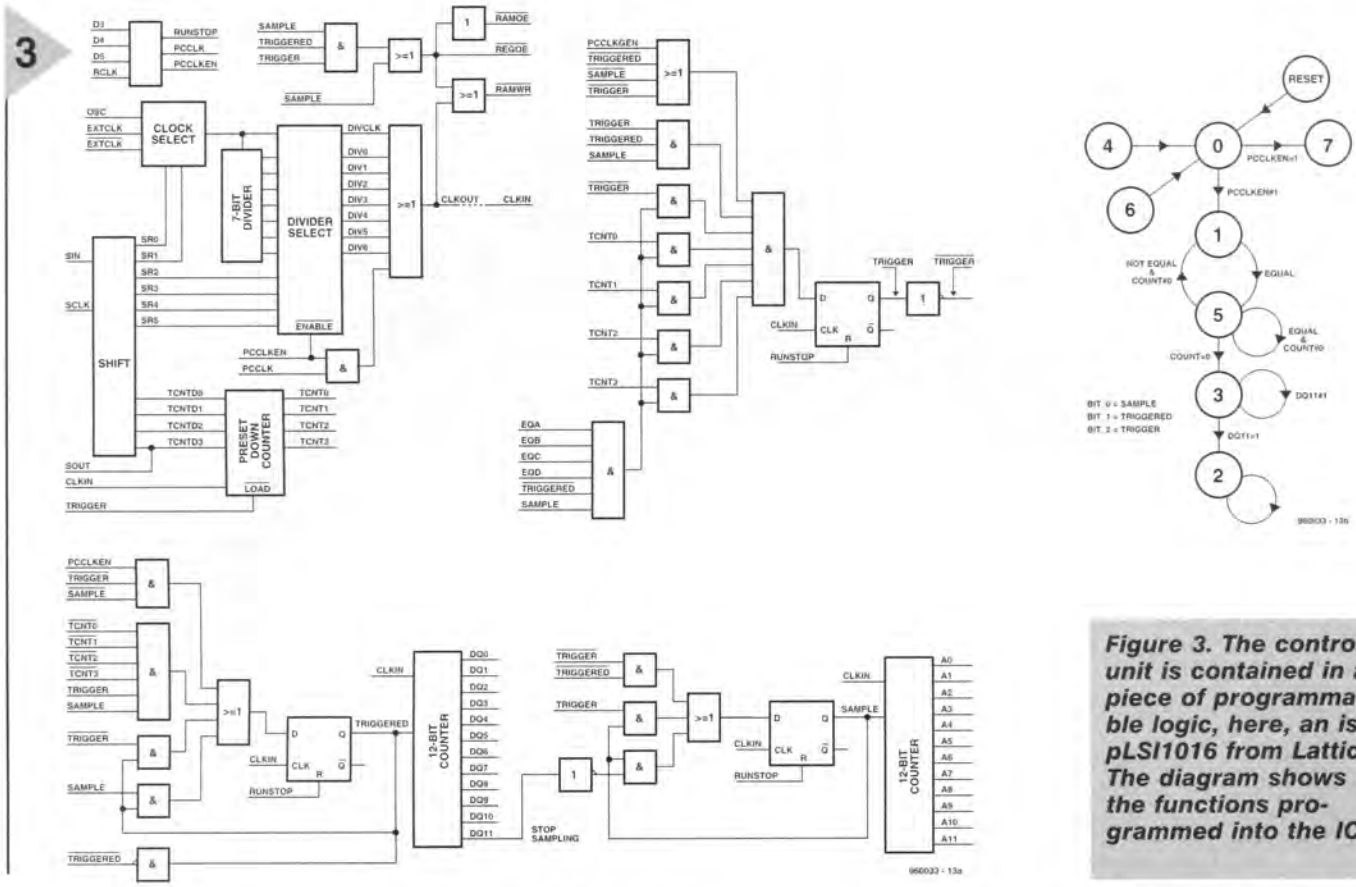

Figure 3. The control unit is contained in a piece of programmable logic, here, an isp-LSI1016 from Lattice. The diagram shows the functions programmed into the IC.

tion is satisfied. At the same time, samples are being stored. Once a trigger condition occurs, state 5 is run until the trigger condition disappears again ('not equal'), and the trigger period has not yet elapsed (count not equal to 0, back to state 1), or until the trigger period has elapsed (count equals 0, proceed to state 3). In state 3, a counter is started which counts down the second sampling period. The end of this period is marked by DQ11 going high, and also signals the end of the measurement.

In two drawings which have not been described so far, the state diagram is shown as a logic circuit with, as an extra, the two counters which count down the addresses (A0 through A11) and the post-triggering period (DQ0 through DQ11).

THE TRIGGER UNIT

The organisation of the trigger unit may be found in **Figure 4**. This unit has a much simpler structure than the control unit, and is used to compare the data read by the instrument against a preset value. In that arrangement, it is possible to compare each individual bit against a 0 or a 1, or not to compare it at all (*don't care*). One of the sixteen comparators is drawn in the circuit diagram. The EN(able) line determines whether the relevant bit is included or not. The LVL (level) line determines the level against which the input information is compared. If the output of the XOR is at 0, the input has the desired value.

The state diagram illustrates the operation of the circuit. It is seen that the level of the LVL input is copied when a *don't care* exists. Consequently, a *don't care* bit requires LVL to be made 0.

If the EN input is logic high, the output will be 0 if the IN input matches the level at the LVL input.

The trigger condition is defined with the aid of the shift register.

The trigger module is also used to read the collected data from the RAM, and to convert it into a serial datastream. By means of bits D0, D1, D2 and D3, one of the 16 bits is selected, and read via the Centronics (parallel printer) port using MUXOUT. The probe selection is determined (in software) by D4 and D5 on the one hand, and CS0 and CS1 on the other (in hardware). In this way, up to four modules may be controlled, corre-

Figure 4. These functions performed by the trigger unit are also based on a programmable logic device.

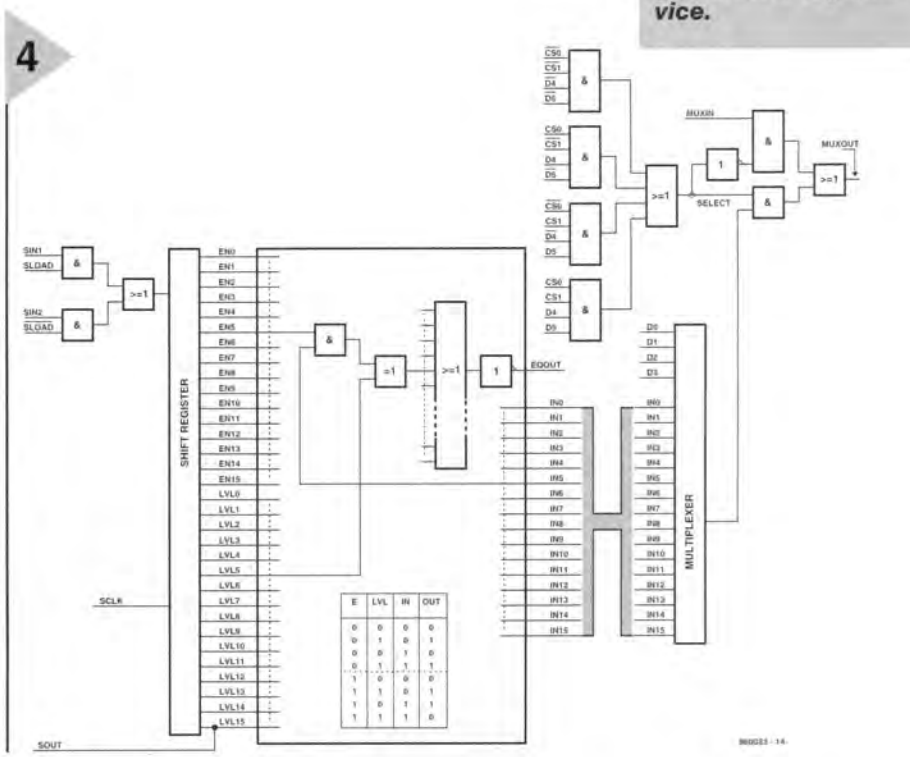

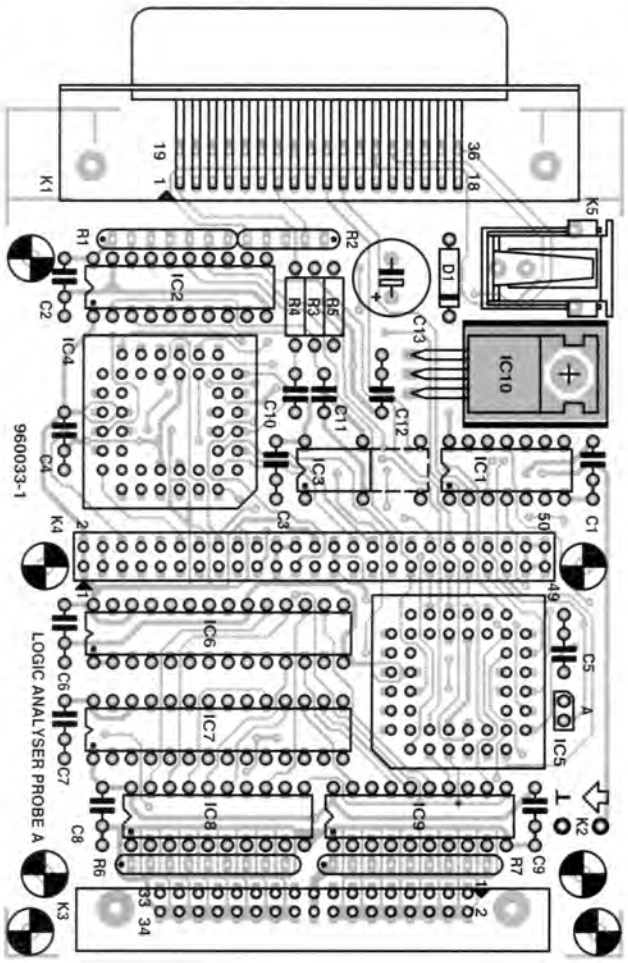

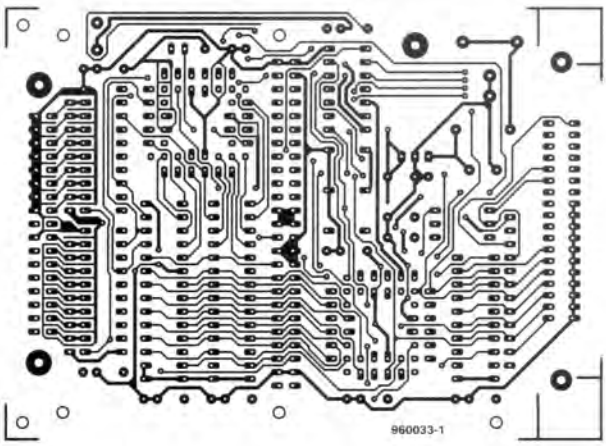

Track layouts shown at 70%

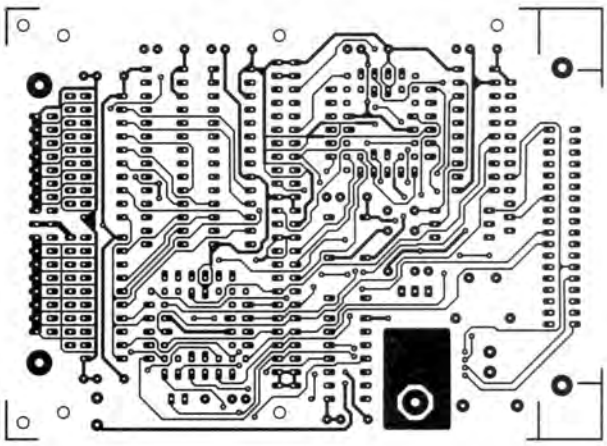

Figure 5. Track layouts and component overlay of the main board (double-sided, through-plated). This basic board provides 16 channels (board available ready-made, see Readers Services page).

sponding to a total of 64 channels.

If the module is not selected, it copies the data which is available at the MUXIN inputs. These are the data supplied by one of the other trigger modules. The great thing about this arrangement is that only one input is required on the Centronics port to read the data supplied by the instrument.

CONSTRUCTION

The patience of those of you who have waited for us to supply high-quality printed circuit boards and tested software for this magnificent project is rewarded. The copper track layout and the component mounting plan of the double-sided, through-plated main board are shown in **Figure 5** (logic analyser with probe A, i.e., the 16-channel version). The track layouts and component mounting plans of the extension boards which are necessary to extend the number of input channels on the logic analyser to 32, 48 or 64 are shown in **Figure 6** (logic analyser probe B, C and D).

With some skill, the instrument may be fitted into the enclosure mentioned in the parts list. The extra effort is rewarded by an extremely compact system. The only restriction is that the recommended case can only accommodate the 16 or 32-channel version of the instrument. If you want to use the 48 and 64-channel extensions, shop around for a larger case.

The mounting of the Centronics socket in particular requires care and precision. Before fitting any part on the board, remove two small pieces from the PCB, near position K1, as indicated by the component overlay. The size of the rectangular clearances created in this way is such that the board fits exactly between the two protruding case parts. If everything works out all right, the board may be secured with screws at three locations. There is rather a lot to do, however, before you may secure the board.

The Centronics connector has to be modified, too. Remove the plastic frame around the connector pins. Don't lose the two metal clamps and

COMPONENTS LIST

(main board)

Resistors:
R1 = 4kΩ7, 6-way SIL array
R2 = 4kΩ7, 4-way SIL array
R3,R4 = 330Ω
R5 = 150Ω
R6,R7 = 10kΩ, 8-way SIL array

Semiconductors:
D1 = 1N4002
IC1 = 74AC04
IC2 = 74LS245
IC3 = 50-MHz crystal oscillator module, Seiko SG531PHC50.0000MHZ (8 pins) or Seiko S951KT-50.0000MHZ (14 pins)
IC4 = ispLSI1016-60 (Lattice), programmed, Elektor order code 956516-1
IC5 = ispLSI1016-60 (Lattice), programmed, Elektor order code 956516-2
IC6,IC7 = cache RAM, 8Kbyte, 12ns, e.g. TC5588P or UM6164-12
IC8,IC9 = 74AC574
IC10 = 78S05

Capacitors:
C1-C9 = 10nF
C10,C11 = 1nF
C12 = 100nF
C13 = 220µF 25V

Miscellaneous:
K1 = Centronics socket, angled pins
K2 = cinch or BNC socket, panel mount
K3 = 34-way flatcable connector, PCB mount, or 34-pin boxheader with associated IDC socket
K4 = 50-pin 2-row header (no boxheader!)
K5 = mains adaptor (jack) socket, PCB mount
Heat sink for IC10
Mains adaptor, 9-12 V/1 A
2 off 34-pin header
Case, Retex Elbox type Re-1

2

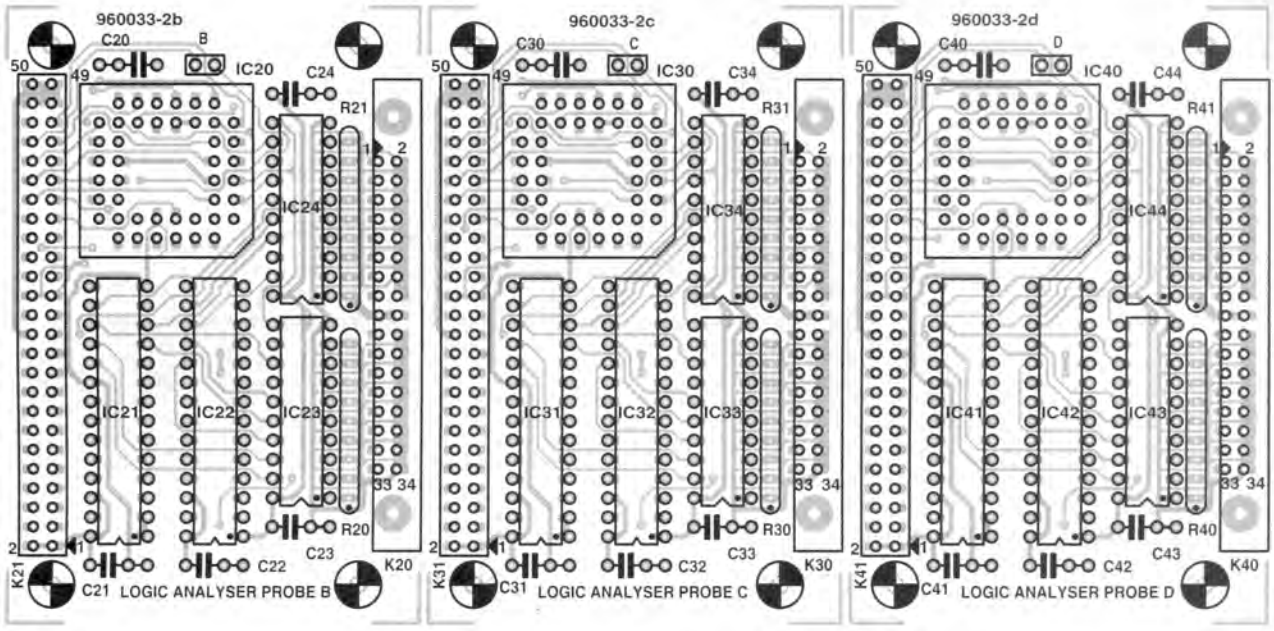

Figure 6. Track layout (70%) and component mounting plan of the extension boards. These boards allow the number of available channels on the instrument be increased from 16 to 64.

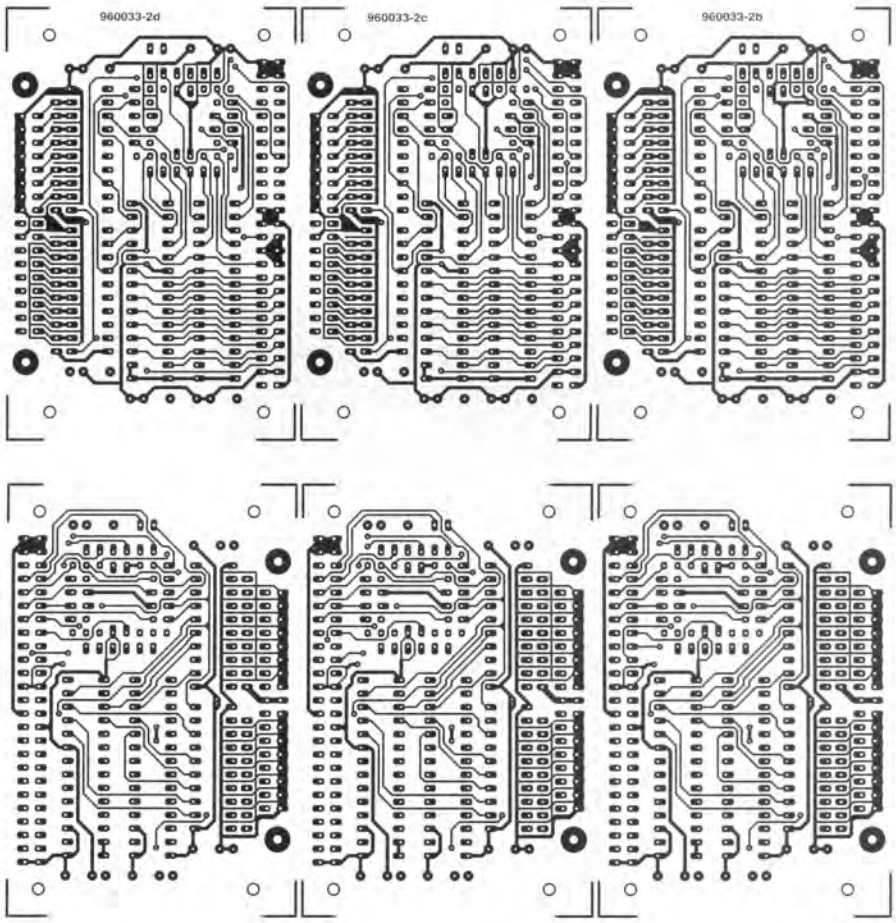

associated screws which are freed in this way. Next, make a clearance for the Centronics socket in one of the plastic front panels that come with the box. The clearance has to be made in such a way that the board rests securely on the moulded pillars in the case once the connector is fitted. Finally, drill two holes for the screws that secure the socket to the panel. If everything is done properly, it should be possible to fit the connector in the clearance, and solder its pins to the board. Mount the board in the case, and check that everything fits properly.

It is recommended to solder the components on to the board before securing the connector. Start by fitting the IC sockets on the board. Be sure to observe the polarity of the sockets for IC4 and IC5! If you fit them the wrong way around, it may be impossible to remove them again without damaging the board. The extension connector, K4, needs to be fitted only when the num-

(90×145×41 mm) (only suitable for version with up to 32 channels)
Approx. 50cm 34-way flatcable
16 red probe clips (prods)
1 black probe clip (prod)
Printed circuit board, two programmed ispLSI devices (IC4 and IC5) and 3.5-inch MSDOS disk with control program. Set order code: 960033-C (see Readers Services page).
Software items also available separately:
3.5-inch MSDOS disk, order code 966010-1;
programmed ispLSI devices: IC4 = order code 966506-1; IC5 = order code 966506-2.

COMPONENTS LIST

(for each extension board)

Resistors:
R20,R21 (R30,R31) (R40,R41) = 10kΩ, 8-way SIL array

Capacitors:
C20-C24 (C30-C34) (C40-C44) = 10nF

Semiconductors:
IC20 (IC30) (IC40) = ispLSI1016-60, programmed, Elektor order code 956506-2
IC21,IC22 (IC31,IC32) (IC41,IC42) = cache RAM, 8Kbyte, 12ns, e.g. TC5588P of UM6164-12
IC23,IC24 (IC33,IC34) (IC43,IC44) = 74AC574

Miscellaneous:
JP20 (JP30) (JP40) = jumper
K20 (K30) (K40) = 34-pin flatcable connector, PCB mount, or 34-pin box-header with mating IDC socket
K21 (K31) (K41) = 50-way, 2-row socket with long pins, or angled pinheader (see text)
2 off 34-pin header
16 probe clips (prods)
Printed circuit board, order code 960033-2 (for 3 extension boards of 16 channels each)

7

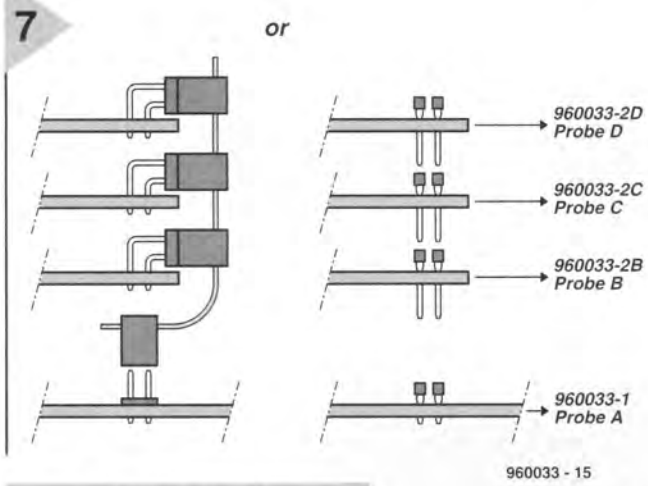

Figure 7. This sketch shows two options for the connection of the extension modules to the main board. The construction using the long pins is the most compact, while the flat ribbon cable is the simplest.

ber of channels (inputs) is actually 32 or greater. If you are satisfied with 16 inputs, this hardware may be omitted.

Voltage regulator IC10 and its heat sink are secured to the board using a short 3-mm bolt. A larger heat sink may be necessary if you use the 64-channel version of the instrument.

A modified IC socket is required to be able to mount the oscillator. The simplest approach is to use a standard 14-pin socket from which the superfluous contact springs are removed (2, 3, 5, 6, 9, 10, 12 and 13).

Once all components are on the board, you may start working on the finishing touches. Mount the two screws that secure the Centronics socket. Use the two screws and clamps which you put aside earlier. Secure the board in the case, and solder two or three of the socket pins at the top side of the board. Remove the board from the case, and solder the socket pins at the solder side of the board.

Once the complete printed circuit board is mounted in the case, the aluminium front panel has to be drilled. A slot has to be fraised or cut in this panel to enable the cable to connector K3 to pass. This is fairly simple by filing away the metal between the two ventilation slots. Next, drill a hole for the BNC (or cinch) socket to which the external clock generator may be connected.

There are two basic ways to mount the extension modules. The most compact result is achieved if you use single-row connectors. Connectors with long pins are used on the extension boards, while the main board has a connector with short pins. The alternative is to use a piece of flatcable with four IDCs (insulation displacement connectors, also known as press-on flatcable connectors). The two options are illustrated in **Figure 7**. The option using the solder-through pins is preferred when any number of extension boards is used, particularly at high sampling frequencies.

The last chore on the list is the construction of a suitable probe. The basic elements of the probe are a piece of flatcable, 32 probe clips or test prods, two IDC connectors, and a double-row header.

Control software

With all the hardware assembled, it is time to actually start testing and using the instrument. Connect the logic analyser to the PC's printer port via a regular printer cable. Also connect a suitable mains adaptor. Finally, install the control program, LA.EXE, on the computer.

When you start the program, the software should report that the logic analyser has been found on the selected printer port. The main menu can then be opened.

The result of the measurement is shown on 64 lines. The user is free to associate these lines to any of the input signals, or give them a suitable name. An example is shown below in **Figure 8**. The function keys allow you to set, among others, the sampling period, the trigger word and the trigger time. Finally, the cursor keys are used to leaf through the measurement results.

Any problems?

The chances that there is a hidden fault somewhere in the circuit are pretty small, but can not be ruled altogether. If the logic analyser fails to work properly, the computer comes to your rescue because it can help you to find the fault. However, before the software is able to do its testing work, you should run a thorough check on the presence of the proper supply voltage at all ICs in the circuit. The circuit diagram is your guide, because it indicates exactly where the supply voltage should be present.

Once you are certain that all ICs receive the correct supply voltage, the operation of all parts of the circuit may be checked using the test program HWTEST.EXE. After starting this program, a menu appears on the screen. The first option launches a software check on the printer port, the second, a check on the clock signal, the third, a check on the shift register, and the fourth, a check on the address counter. Finally, the program returns the address of the selected printer port.

The operation of the printer port may be verified with the aid of a multimeter. The menu on the screen provides clear indications on the checks to be performed.

The other tests unfortunately require an oscilloscope. As with the printer port, the test instructions etc. appear on the computer screen. In this way, any fault that may exist in the circuit is rapidly located, and the logic analyser may be employed to every one's satisfaction. (960033)

For further reading:
ispStarter Kit from Lattice, Elektor Electronics December 1994.

8

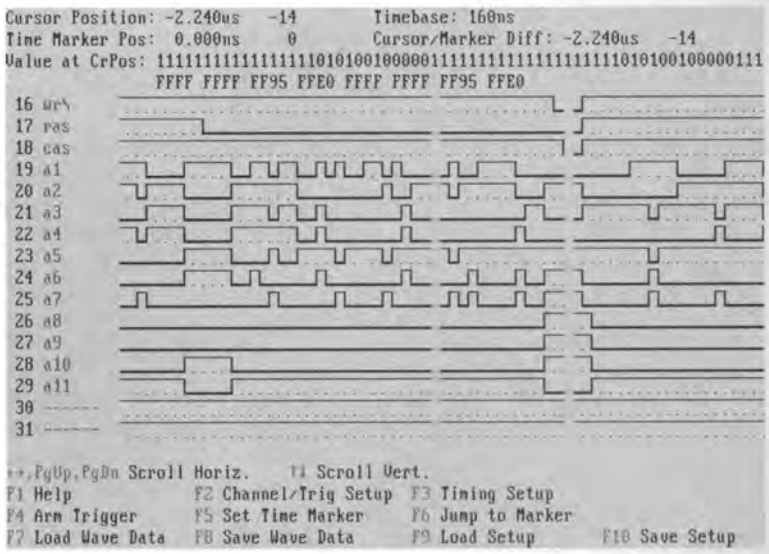

Figure 8. The software does not demand too much from the PC. In practice, any modern PC will do.

mains voltage monitor

LED bar shows voltage level

In most of the United Kingdom, we are assured of a stable 240 V mains supply voltage. In many other regions, including some parts of Europe, that stability is not always evident. The circuit described in this article uses a bar of LEDs to show at a glance what the actual level of the mains voltage is at any one moment.

Most electricity generating stations in the UK and other western countries provide a mains voltage that is stable within a few per cent. This stability is not found in many parts of the world or where the mains voltage is supplied by an emergency generator or inverter (that is, a direct voltage to alternating voltage converter). In such cases, a monitor that shows at a glance the actual voltage level over the range 160–250 V in 10 V steps (each associated with one specific LED) is very useful. It is particularly so during an overseas holiday when you want to make sure that the local mains voltage is suitable for operating a 240 V appliance brought from the UK. If you do, remember to take a suitable adaptor, varieties of which are now readily available from many high-street outlets and supermarkets.

Two transformers instead of one

In the mains voltage monitor, the transformer is used not only for providing an isolated power supply for the electronic circuitry, but also as a measuring device. For the latter purpose, the voltage across the secondary winding should be directly (linearly) proportional to the mains voltage across the primary. However, mains transformers are generally designed so that the specified secondary voltage is obtained at the lowest possible cost, that is, with the minimum of material. This means that, in normal operation, they work rather close to the core-saturation point or, in other words, on a part of the magnetization characteristic that is already curved. In other words, there is no longer a linear relationship between primary and secondary voltage. It is, however, essential that for measuring purposes the transformer works on the linear part of the magnetization characteristic. There are two ways of solving this problem: (1) wind your own transformer, or (2) use an existing transformer well below its nominal voltage.

In the circuit in **Figure 1**, the second solution has been chosen. Since the primaries of the two mains transformers are in series, each of them carries half the mains voltage. This ensures that both transformers operate in the linear region of the magnetization characteristic. Compared with the use of a resistance or capacitance in series with the primary to reduce the voltage across the primary, the two-transformer solution has the advantage that the secondary voltage is not nearly so dependent on the load.

Rectifiers

Each of the transformers used has two isolated secondary windings. One of these windings is connected in series with one from the other transformer. With 240 V applied to the two primaries in series, the voltage across each of the pairs of series-connected secondary windings, with a nominal load, is 9 V. In reality, it is rather higher owing to the small load.

The voltage across one of the pairs of series-connected secondaries is applied to bridge rectifier B_1 to power the electronic circuitry. Therefore, the rectifier is followed by storage capacitor C_2, decoupling capacitor C_3 and voltage regulator T_1. The base voltage of this transistor is limited to 15 V by zener diode D_2. This ensures that the potential at the emitter, which is the output, cannot rise above 14.5 V. The

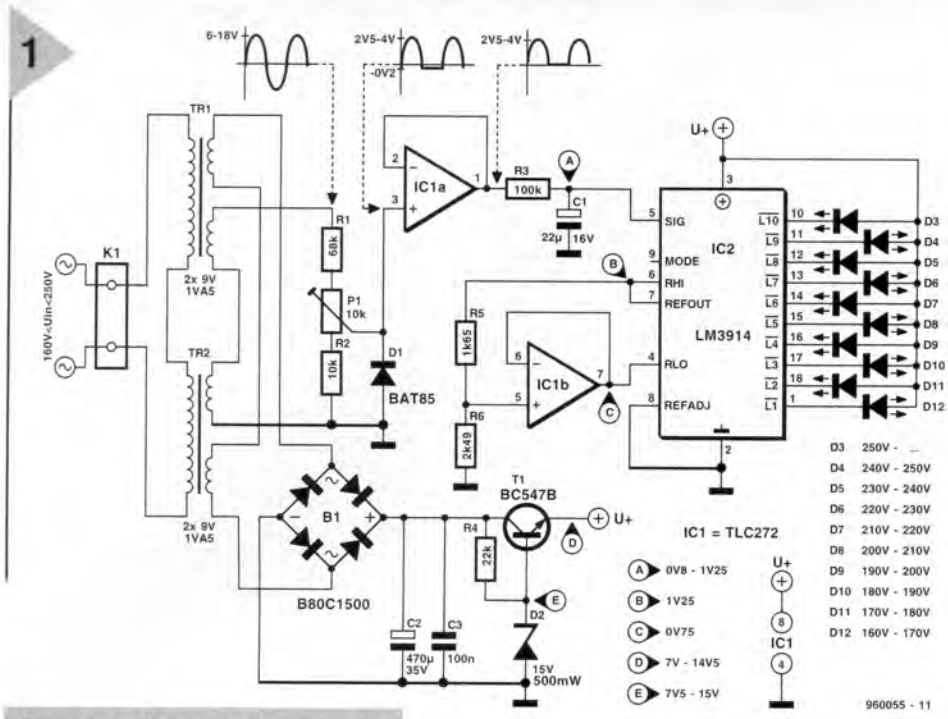

Figure 1. The two mains transformers serve both as a supply and as a measuring device. To improve the linearity, they are connected in series and each is thus powered by only half the mains voltage.

minimum level of the emitter voltage, which is used to power IC_1 and IC_2, is about 7 V.

The voltage across the other pair of series-connected secondaries is applied to potential divider R_1-P_1-R_2. The voltage at the wiper of P_1 is an alternating voltage whose level, with respect to earth, is between 1/10 and 1/4 of the secondary voltage, depending on the position of P_1. Between the wiper and earth, there is D_1, which is cut off during the positive half of the alternating voltage, and conducts during the negative half. Thus, the level of the positive half as set with P_1 is dropped across the diode and so applied to the non-inverting input of IC_{1a}. The negative half is virtually short-circuited by the diode, so that all that remains of it is the drop across the diode. Since D_1 is a Schottky type, the drop is not 0.6 V as with most other diodes, but only 0.2 V. Thus, the waveshape of the voltage is as shown at the top of the circuit diagram in Figure 1.

Operational amplifier IC_{1a} is arranged as a voltage follower. Because of the feedback of the output to the inverting input, the potential at the output is identical to that at the input, that is, the amplification is 1. The advantage of this kind of stage is its decoupling and impedance conversion: the impedance at the input is high, whereas that at the output is low. In addition, the op amp also eliminates the 0.2 V drop across D_1 during the negative voltage half. The op amp cannot process a negative signal without a negative supply, so that only positive half waves are present at its output. To ensure a stable indication, these half waves are converted into a direct voltage by network R_3-C_1. The time constant of this network must not be too large, as this would slow down the indication, or too small, as this would cause a rather large ripple on the direct voltage. With component values as specified, the time constant is 2.2 seconds and the ripple only 0.9 per cent (with a mains frequency of 50 Hz). The resulting average value, U_{AV}, of a sinusoidal voltage has a fixed relationship to the root-mean-square (r.m.s.) value, U_{RMS}, of

$$U_{RMS} = 1.11 U_{AV}$$
(full-wave rectification)

or

$$U_{RMS} = 2.2 U_{AV}$$
(half-wave rectification)

These factors will obtain when the preset potentiometer has been set so that the LED associated with the mains voltage whose r.m.s. value is U_{RMS} lights.

IC WITH LEDS

The LED display is easily constructed thanks to the availability of integrated LED bar drivers. That used in the prototype is an industry-standard Type LM3914. This device is housed in an 18-pin case, accepts analogue input voltages, and has more than 10 LED driver stages at its output. The gradation of the LED scale is linear. As will be seen from **Figure 2**, the inner circuitry is clear and simple: after the input signal has been buffered, it is applied to the inputs of 10 comparators that obtain their linear reference voltage from a precision potential divider. The voltage across the potential divider is internally generated at a level of 1.25 V.

The LEDs can be linked without the usual series resistor directly to the outputs of the comparators, which provide a constant current. Depending on what is connected to pin 9, the display may work either in the point mode or in the bar mode. For the present application, the point mode (pin 9 open circuit) is best because of the low current drain and the fixed load on the transformer. The bar mode is selected by linking pin 9 to pin 3 ($+U_B$).

Potential divider R_5-R_6 serves two purposes: (1) to determine the voltage level at pin 4 (RLO) and thus the lower limit of the LED display; and (2) the brightness of the LEDs (through its total resistance). The centre of the divider is linked to pin 4 via voltage follower IC_{1b}.

The ratio of the voltages at the upper and lower connections to the

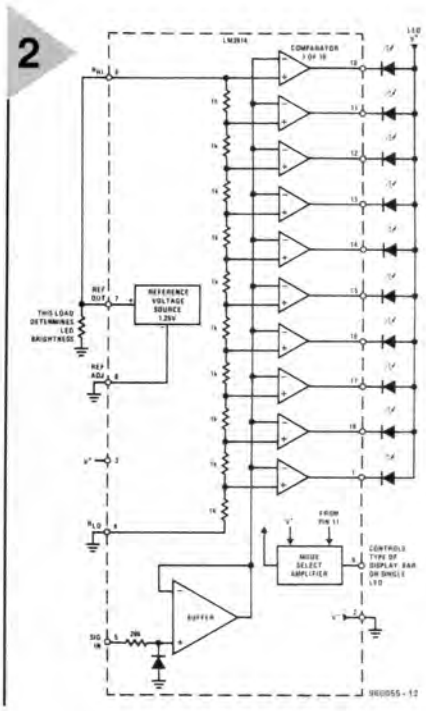

Figure 2. The LM3914 contains a reference-voltage source, a voltage divider and ten comparators that each can drive an LED at constant current.

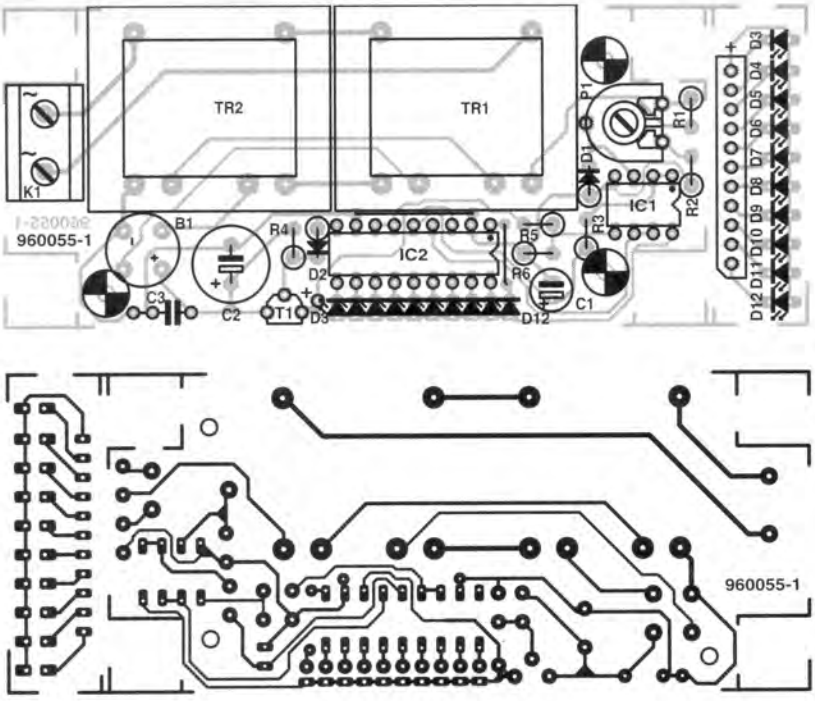

Figure 3. The printed-circuit board may be cut or snapped into two to enable the LEDS to be located away from the mother board.

internal voltage divider, pins 6 and 4 respectively, results from the ratio of the minimum and maximum mains voltage, which is shown in 10-V steps by the LED display. That is,

$$150/250 = 0.75/1.25 = 0.6.$$

Preset P_1 must be adjusted so that when the mains voltage is 240 V, exactly 1.2 V exists at the output of the rectifier, that is, the positive terminal of C_1 (see Calibration). At this voltage, D_4 lights. Since the lower voltage of 0.75 V corresponds to a mains voltage of 150 V, the lower LED will light when the mains voltage is 160 V (150 V + 10 V). For every 10 V increase, the next higher LED will light.

CONSTRUCTION

The monitor is best built on the printed-circuit board shown in **Figure 3**. As usual, fit the wire bridge first, followed by the small components, medium-size parts and finishing with the two transformers. Fit all ICs in suitable sockets. In view of the relative density on the board and the vertically mounted resistors and diodes, make quite sure that no components accidentally touch other parts, which might cause short-circuits. Make sure that diodes and electrolytic capacitors are fitted with correct polarity.

There are two ways of fitting the LEDs: (1) normally on the mother board, or (2) on a separate part of the board after this has been cut off—see Figure 3. In the latter case, fit an 11-way single row pin header at the edge of the mother board as shown (the 11-way strip may be cut from a 20-way standard strip with a pitch of 0.1 in. or 2.54 mm), and a mating 11-

Parts list

Resistors:
R_1 = 68 kΩ
R_2 = 10 kΩ
R_3 = 100 kΩ
R_4 = 22 kΩ
R_5 = 1.65 kΩ, 1%
R_6 = 2.49 kΩ, 1%
P_1 = 10 kΩ preset horizontal potentiometer

Capacitors:
C_1 = 22 μF, 16 V, vertical
C_2 = 470 μF, 35 V, vertical
C_3 = 100 nF

Semiconductors:
D_1 = BAT85
B_1 = B80C1500
D_3, D_7–D_{12} = LED, red, high efficiency
D_4, D_6 = LED, yellow, high efficiency
D_5 = LED, green, high efficiency
D_2 = zener diode 15 V, 500 mW
T_1 = BC547B

Integrated circuits:
IC_1 = TLC272CP
IC_2 = LM3914N

Miscellaneous:
K_1 = terminal block, 2-way, pitch 7.5 mm
TR_1, TR_2 = mains transformer 2.9 V, 1.5 VA, e.g. Velleman 2090018M (Maplin)
Plug case with UK plug = RS 223-152 or Maplin BN56L or Maplin BN57M
Plug case with continental plug = SE410EU
PCB Order no. 960055 (see Readers Services elsewhere in this issue)

The world's mains voltages

As with many things, there is a wide variety of mains voltage levels in the world. Whereas many countries in Europe have a 220/230 V, 50 Hz supply (3-phase: 380/400 V), the United Kingdom, Eire, Australia,New Zealand, and others, have a 240 V, 50 Hz supply (3-phase: 415 V), while North America and parts of South America have a 110 V, 60 Hz supply (3-phase: 190 V). After many discussions and conferences in the 1970s, the International Electrotechnical Commission (IEC) decided in 1983 to prompt member countries to adopt a world-wide 230 V, 50 Hz mains supply. The complete specification was laid down in IEC Publication 38 'IEC Standard Voltages' (available from the British Standards Institution – ask at your local library).

As in the case of world-wide television standards (or lack thereof), there is much wishful thinking in this, because, apart from in some European countries, the response to IEC38 has been rather cooler than lukewarm. This is not surprising if one considers the enormous costs involved in changing over to a completely new norm. How would European countries have reacted if the IEC had been American-dominated and had suggested a world-wide change to 110 V, 60 Hz?

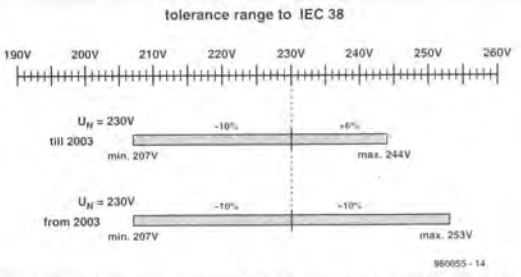

The situation in continental Europe is, as said, fairly simple, since all electricity generating plant generate mains voltages of 220/230 V, 50 Hz, which fall within the tolerances allowed in IEC38 – see illustration. The same is true in the United Kingdom and some other countries. Whether the USA and Canada, not to mention many other countries, will ever change to the recommendations of IEC38 must be considered highly unlikely.

way multiple socket to the display board, so that this can be pushed on to the pin header. It is also possible to link the two boards via an 11-way flatcable soldered to the pin header and socket. In either case, this allows the LEDs to be positioned so that they protrude through the holes in the top cover of the case—see **Figure 4**.

Operation

Before connecting the monitor to a mains outlet, give it a thorough inspection to make sure that the wiring, polarity, where applicable, and component location are all right, the tracks are free from solder surplus, and the solder joints at the transformers and K_1 are sound.

Place the board on a clean sheet of non-slip insulating material, set P_1 to the centre of its travel and only then connect the mains voltage to K_1 and to earth (C_3). From then on use the utmost caution not to touch any mains-carrying parts or connections.

Assuming that the circuit is in good working order, nothing will happen for a few seconds, but then the lower LED lights, after which the point of light moves up and up until it comes to rest somewhere above the centre of the display. Disconnect the mains, whereupon the light-point rapidly moves downwards and then goes out. If al this happens, you can go straight to the final sections: Assembly and Calibration. If not, the next section may be of help.

Faultfinding

Remove the two ICs from their socket. The following refers to the test points shown in **Figure 4** and voltage levels shown in Figure 1.

Reconnect the board to the mains and test the board step by step, but **between every measurement and check or soldering action**, for instance, at the underside of the board, **unplug the mains!**

Start by measuring the voltages at E and D and check whether these are the same, within, say 10%, of the values shown in the circuit diagram.

If the voltage at D (emitter of T_1) other than about 0.6 V lower than that at E, there is something wrong with T_1.

If the potential at E is higher than 15 V, D_2 is defect or wrongly rated.

If the voltage at E is only about 0.6 V, D_2 is in all probability connected with wrong polarity.

If the voltage at E is under 7 V (but clearly larger than 0.6 V), measure the alternating voltage at the a.c. terminals of rectifier B_1. If this is not higher than 9 V, unsolder the rectifier and measure the alternating voltage again. If it is then (much) higher than 9 V, there is a fault with one of components B_1, C_2, C_3, T_1 or D_2.

Keep the meter in the a.c. range and measure the alternating voltage between earth and the terminal of R_1 that is not connected to P_1. This voltage must be clearly higher than 9 V. If it is not, the transformer is faulty or there is a capital error in the soldering which short-circuits the transformer.

Set the meter to the d.c. range and measure the voltage across D_1; this should be in the range 0.8–1.3 V (with P_1 set to the centre of its travel). If it is not, the diode is either defect or connected with wrong polarity.

If an oscilloscope is available, check that the waveforms at R_1 and IC_{1a} (pin 3) are as shown on the circuit diagram.

Reinsert IC_1 into its socket and measure the voltage at A. If this is clearly higher than that earlier measured across D_1, in all likelihood IC_1 is defect. Is the voltage lower, however, check the values of R_3 and C_1. If these are in order, IC_1 needs to be replaced.

As long as IC_2 is not in circuit, the potential at C must be about 0 V; when the IC has been reinserted, it should rise to about 0.75 V. If it does not, measure the voltage at B; if this is nowhere near 1.25 V, replace IC_2. If it is, check the values of R_5 and R_6.

If the voltage at pin 5 of IC_1 is 0.75 V (or very nearly so), this potential must also be present at C (or pin 7). If it is not, replace IC_1.

If all the voltages are correct, the LEDs should light; if they do not, they are connected with wrong polarity or the LED outputs of IC_2 are not being switched to earth. If only D_{12} does not light, the wire bridge has been forgotten.

Assembly

Mount the board on short spacers in the plug case specified. Link the mains plug terminals to K_1 and to the earth terminal near C_3 (see Figure 4). Drill holes at the correct location in the cover of the case for the LEDs to just fit in (see photograph at the start of this article). In the prototype, they actually protrude slightly through the holes.

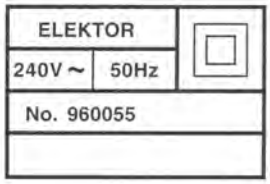

Calibration

The simplest way of calibrating the monitor is by measuring the mains voltage with a multimeter and setting P_1 to a position which causes the relevant LED to light.

The second method is rather more tedious, but more exact. First, with a multimeter, measure the reference voltage, U_{REF} (between pins 2 and 7 of IC_2) and then the mains voltage, U_{MAINS}. Using these measurements, set the voltage across C_1, U_{C1}, with P_1 to a value:

$$U_{C1} = U_{REF} \times U_{MAINS}/250. \qquad [V]$$

Thus, when $U_{REF} = 1.25$ V, $U_{MAINS} = 240$ V, set the potential across C_1 to 1.2 V.

Note that with IC_2 in the point mode it may happen that two LEDs light simultaneously when the input at pin 5 of IC_2 is exactly at the change-over level from one LED to another.

(960055)

Figure 4. Location of the test points on the board. Note that the only connections to the board are the three mains wires, l(ive), n(eutral) and e(arth).

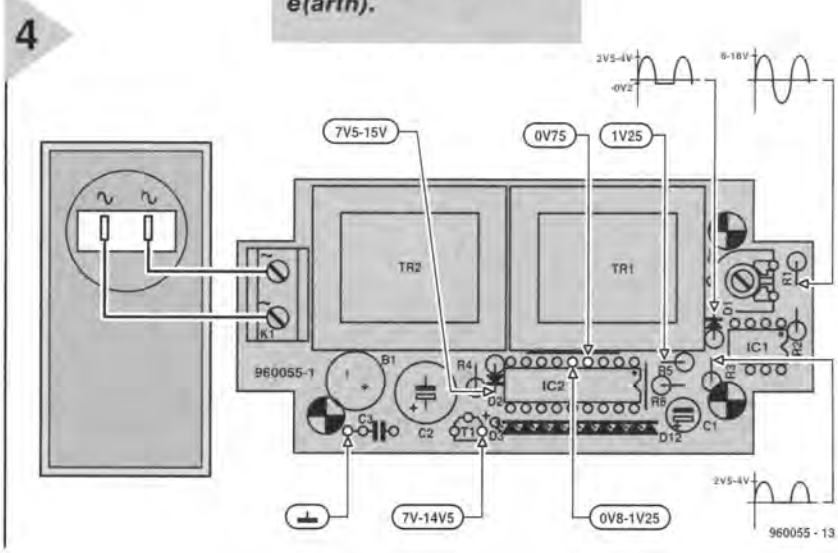

battery monitor

SAA1501T: an integrated battery capacity indicator

Some time ago, Philips introduced a new Battery Management IC: the SAA1501T. This IC was developed specifically for application in intelligent battery packs, increasingly popular add-ons for laptops, camcorders, electrical tools, and others. These packs consist of a traditional NiCd or NiMH battery and a microelectronic circuit to indicate the state of the battery and, if required, to control a fast charging process. Thus, the IC forms the brain, as it were, of an intelligent battery.

Most manufacturers expect an explo-sive growth of the intelligent battery market in the not too distant future. Certainly, in equipment such as laptops, electronic organizers, and mobile communication equipment, a reliable indication of the state of charge of the battery is very important. This has led to the development of a number of special monitor ICs, of which the SAA1501T is the latest. The IC is supplied in SMT (surface mount technology) and this, coupled with the fact that few additional components are needed, makes for a very compact unit.

In today's hurried world, nobody has the patience to wait for even half a day for a battery to be charged. It has to be done quickly, or even quicker. But, as is well known, there are certain risks involved in the fast charging of batteries. A standard charger is, of course, totally unsuitable, because the charging process has to be monitored regularly to prevent the battery becoming damaged.

Fast charging requires advanced electronic control circuits and it is, therefore, not surprising that battery management ICs, which enable charging times of less than an hour to be achieved, have come about. Basically, these devices ensure the timely switchover from fast charging to standard charging. This is made possible by accurate measurement of the terminal voltage or battery temperature or on the basis of a certain charging level being exceeded.

INTELLIGENT AND FLEXIBLE

The SAA1501T belongs to a family of three, whose other two members are the SAA1500 (sacmos) and the74LV4799 (low voltage cmos). The SAA1501T is, however, the most flexible. Unlike the other two devices, whose mode-setting needs to be carried out externally (with a microprocessor), the SAA1501T provides its own intelligence for this. As regards the charging and discharge currents, the SAA1501T comes out on top as well. The 74LV4799 is intended exclusively for applications with fixed charging and discharge currents, and the SAA1500 for those with fixed charging currents and variable discharge currents. The SAA1501T, however, can be used where both currents are variable.

The IC is built in BICMOS technology, which is a combination of bipolar and CMOS technology: this indicates immediately that there is an analogue and a digital part. The analogue part retrieves the data pertaining to the discharge and charging currents, while the digital part processes these data. Apart from the current levels, the charging and discharge times are also registered, so that a precise picture can be formed as to the state of charge. This arrangement is sometimes called the counting coulombs principle and is far more accurate than just measuring the battery voltage. This is because measuring the charge is not so dependent on the load , the age of the battery, the temperature and the differences between the constituent cells as is measuring the absolute voltage.

The state of charge is indicated in a percentage of the nominal battery capacity. This indication is always available to the user, even when the battery is away from the equipment it powers.

COUNTING COULOMBS

A simplified basic circuit of the SAA1501T is shown in **Figure 1**. It is a design in which the charging current as well as the discharge current are monitored by the same sense resistor. This is a well proven technique in designed intelligent batteries.

The IC differentiates between four different modes: (1) charging; (2) discharging; (3) self discharge; (4) combination. In the latter, there is a charging current as well as a discharge current, which is, for instance, the case when the battery is being charged but also

The content of this note is based on information received from manufacturers in the electrical and electronics industries or their representatives and does not imply practical experience by Elektor Electronics or its consultants.

discharged via a load. The modes are differentiated on the basis of current level detection.

In the figure, it is seen that the sense voltages are first of all applied to two *U/I* converters, one for the discharge current and the other for the charging current. They convert the measured values into currents I_c and I_d that are acceptable for the IC. These currents not only form the basis for the mode detection and switch-over circuits (not shown in Figure 1), they are also fed to an analogue-to-digital converter—ADC. Before the charge-packets can be processed in the up/down counter, a conversion has to be carried out.

The counting coulombs principle is detailed in **Figure 2**. Starting with the charging process, a small part (⅙) of the converted charging current, I_c, is integrated with the aid of buffer capacitor C_{cnt}. The potential across this capacitor increases until high switching level V_h of comparator 2 is exceeded. Thereupon, at the next leading edge of the clock, F_{clk}, a defined current level, I_s, is subtracted from the converted charging current until the potential across C_{cnt} drops below V_h again. This is effected by switching on a voltage source from the output of the comparator via a bistable. During the n clock cycles that I_s is active, logic up-counts are sent to the coulomb counter. In other words, packets of charge equal to $I_s \cdot F_{clk}$ are counted.

A similar situation pertains in the discharge mode: the only difference is that the potential across C_{cnt} decreases when a discharge current I_d flows, and that I_s is added to the converted discharge current. This results in down-counts instead of up-counts.

The complete block diagram of the IC is given in **Figure 3**. It is seen that the content of the coulomb counter is available at outputs L20–FULL (pins 15–20) via an output decoder. The display may be by an LCD or LEDs. In the latter case, BP (pin 21) is linked to earth. Outputs BLI (battery low indication) and BUZ provide a timely warning, optically (flashing LEDs) or audibly (buzzer), when the remaining charge is about to drop below 10 per cent of the nominal battery capacity.

CHARGING SAFELY

The SAA1501T can also function as the controller of a fast charger. The electronic circuits for this have been designed to ensure a short charging time allied to maximum protection for the battery on charge.

The IC can arrange three charging levels: fast (k = 1); standard (k = 0.1); and trickle (k = 0.025). As soon as the FULL output is actuated, a switch from fast charging to standard charging is effected. The k factor is then ten times smaller, which results in the control current, kI_{max}, arranging a longer integration time on pin Cd(3). (I_{max} is derived from the bandgap voltage, V_{gap} which is preset by R_{max}). All this means that the duty factor of the enable signal on pin EN(2) becomes smaller. This is illustrated in the curves in **Figure 4**. Since the enable signal controls the (external) charger, a smaller duty factor results in a smaller average charging current.

The aim of switching over to standard charging is to prevent a risky overcharge. Since the charging efficiency of any battery is smaller than 100 per cent, the individual cells will just not be fully charged after one hour at a charging current of 1C. To ensure a full charge, the remaining charging is done at the safe current of C/10. Even if

1

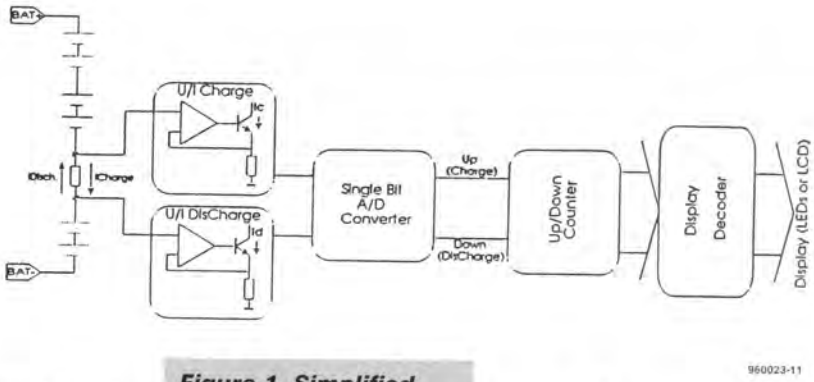

Figure 1. Simplified representation of the measurement method utilized by the SAA1501T.

2

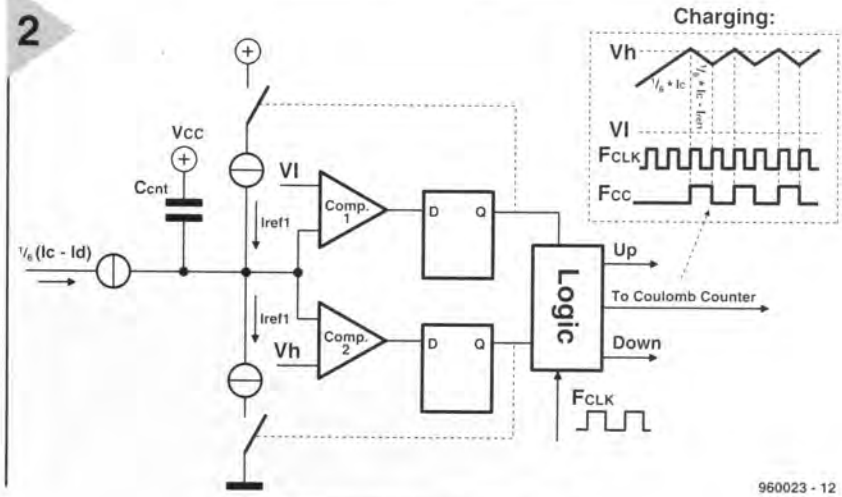

Figure 2. The charging current and discharge current are converted to, respectively, up-count pulses and down-count pulses for the coulomb counter with the aid of two comparators, two reference sources and a clock signal.

Figure 3. Block diagram of the SAA1501T. The display driver can control an LCD as well as LEDs.

3

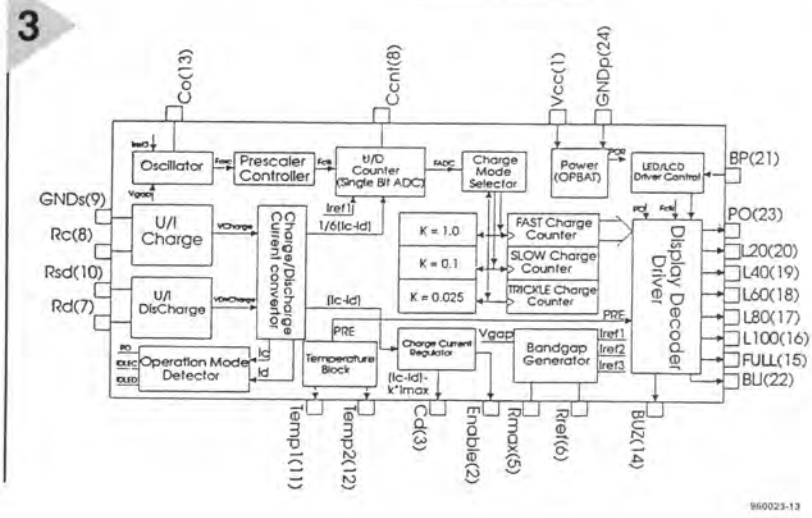

the cells were fully charged, this level of current would be harmless.

The duration of the fast charging cycle, as well as the average charging efficiency, is set with an external resistance pin 8 (Rc). The duration of the standard charging cycle is 20 per cent of that of the fast charging cycle.

When the standard charging ceases, a switch to trickle charging takes place: the *k* factor decreases from 0.1 to 0.025, which lengthens the integration time on pin Cd and causes the duty factor to become smaller. The resulting charging current is just sufficient to compensate for any capacity loss caused by self-discharge in the battery.

TEMPERATURE PROTECTION AND STANDBY MODE

Apart from limiting the charging current, the SAA1501T has yet another facility for protecting a battery. This is the temperature block in Figure 3, which provides effective protection against too high temperatures, which is important because batteries are easily damaged when they are being charged at too high temperatures. When the block senses the approach of the maximum battery temperature, T_{max}, the IC causes the charging to be switched from fast to standard.

The block also provides a temperature-controlled count-down time in the standby mode. In this mode, there is neither a charging current nor a discharge current*. The IC is quiescent, but does maintain the charge since that diminishes owing to self-discharge. Since the self-discharge current cannot be measured, self-discharge days are counted in its stead. Since self-discharge is independent of temperature, three temperature ranges may be selected in the standby mode: 200 days ($T_b < T_{SB2}$), 100 days ($T_{SB2} \leq T_b$) or 33 days ($T_b > T_{SB1}$), where t_b is the battery temperature. Setting T_{max}, T_{SB1} and T_{SB2} is effected with the aid of a resistor with negative temperature coefficient (NTC) and a standard resistor between pins Temp1 and Temp2.

In the standby mode, the current drain does not exceed 90 μA, which is only a tiny part of the self-discharge current and, for all practical purposes, negligible. The level of the current is so low because in the standby mode a number of functional blocks are disabled and the whole of the current is virtually that drawn by the oscillator.

PRACTICAL APPLICATION

A practical application of an intelligent battery using an SAA1501T is shown in **Figure 5**. In this design, the IC is used purely as a capacity indicator. In case several batteries are connected in series, the wire between any two batteries may be used as a sense resistor, R_s.

The use of voltage dip protection circuit (block marked 2) is optional. It should not be used if only two batteries are used because of the voltage drop across the diode and series resistor.

The IC needs a supply voltage of 2–4.3 V. If the battery voltage is higher, the IC is supplied by two or three batteries only (as shown in the figure).

The discharge time can be varied by a resistor on pin 7 (Rd). This resistor also determines the average discharge efficiency. This is essential for situations in which the discharge current is so large that the batteries cannot attain their nominal capacity. The choice of a correct discharge efficiency prevents the situation where the batteries are discharged before the signal 'battery low' is given.

[960023]

4

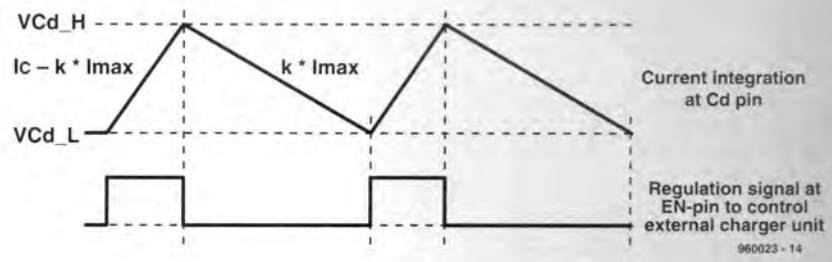

Figure 4. Operation of the charging-current control in the IC. At the top the current integration at the Cd pin; below it, the regulation signal at the EN pin to control an external charger.

5

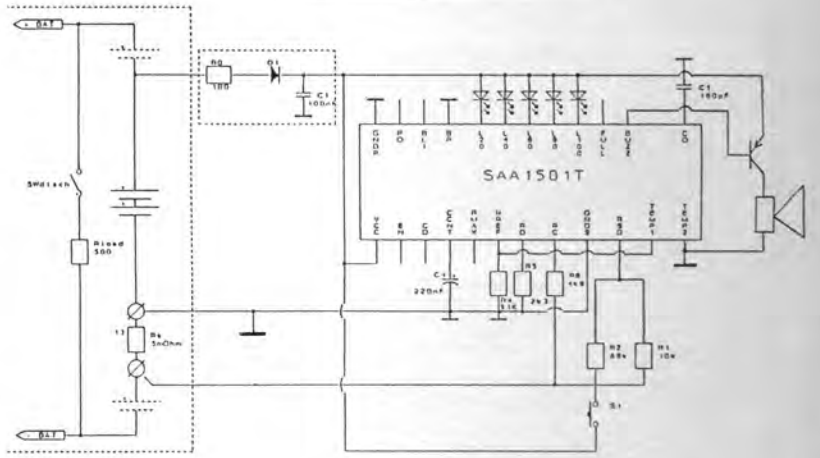

Figure 5. Diagram of a practical application of the intelligent battery pack using an SAA1501T.

Apologies.

In our December 1995 issue, we ascribed the design of the 'Power Supply Discriminator' (page 90) to L. Lemmens. The design was, in fact, by P.E. Bosma, to whom we apologize for this oversight.

digital VU-meter

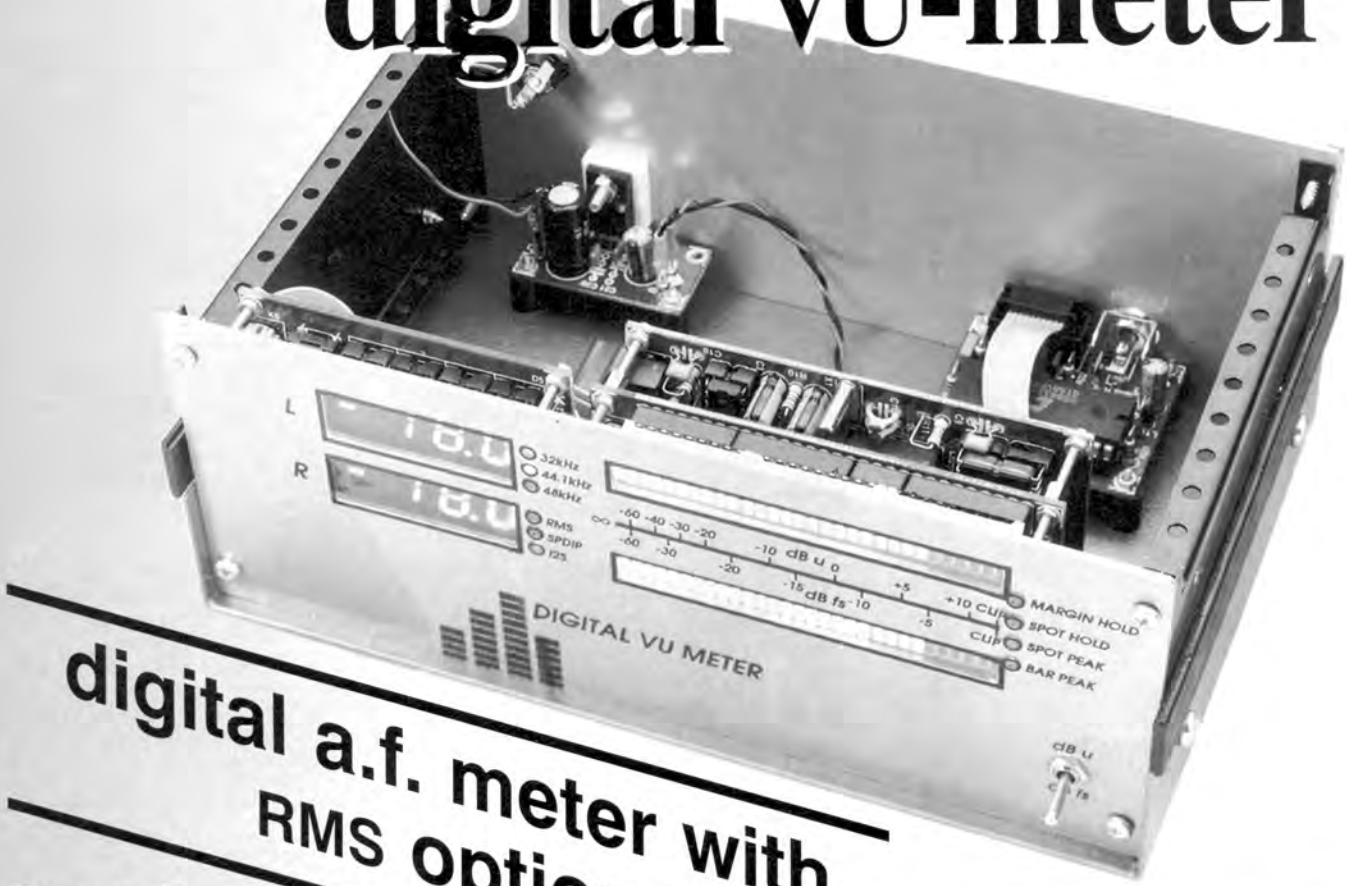

digital a.f. meter with RMS option

Part 2: Construction and Operation

After last month's detailed description of the design and facilities of the accurate, multi-faceted digital vu meter, this month's final instalment deals with the construction and operation of the instrument.

design: H. Schaake/R. Smeding

As discussed in Part 1, the circuit consists of five functional blocks, which are readily recognized in the components layout of the double-sided through-plated printed-circuit board in **Figure 3**. The board is available ready made—see the Readers services list elsewhere in this issue. The board should be cut along the indicated lines into five discrete parts, so that each functional block gets its own board.

This arrangement makes the construction very flexible: not only can a variety of enclosures be used to house the meter, but matching the function to a specific application becomes straightforward.

Figure 3 forms an excellent guide for populating the five boards. That of the supply board is straightforward, although it should be noted that the voltage regulator needs cooling. The simplest way of achieving this is to screw the device to the rear panel of the enclosure if this is a metal one; if a plastic case is used, the regulator should be fitted to a heat sink.

The S/PDIF interface is provided with a coaxial connector, K_4, to which the serial data is applied via a coaxial cable. It is advisable to use gold-plated connectors to ensure good contact at all times. Fit the device in a suitable socket to minimize the risk of damage through soldering. Mount all resistors upright. The present design does not include an optical input, but it may be seen from **Figure 4** that a relevant interface can be added without any difficulties. An added benefit of such an addition is that an extra coaxial output is provided as well.

Populating the two display boards should not present any difficulties. Mount all LED displays and the Maxim controllers, IC_7 and IC_8, in suitable sockets. Connectors K_6 and K_7 are flatcable types for board mounting. Provided the polarity of the LEDs and the electrolytic capacitors is observed, nothing can really go wrong.

The central processing unit, IC_1, must be mounted in a suitable

Figure 3. The printed-circuit board for the digital VU meter.

3

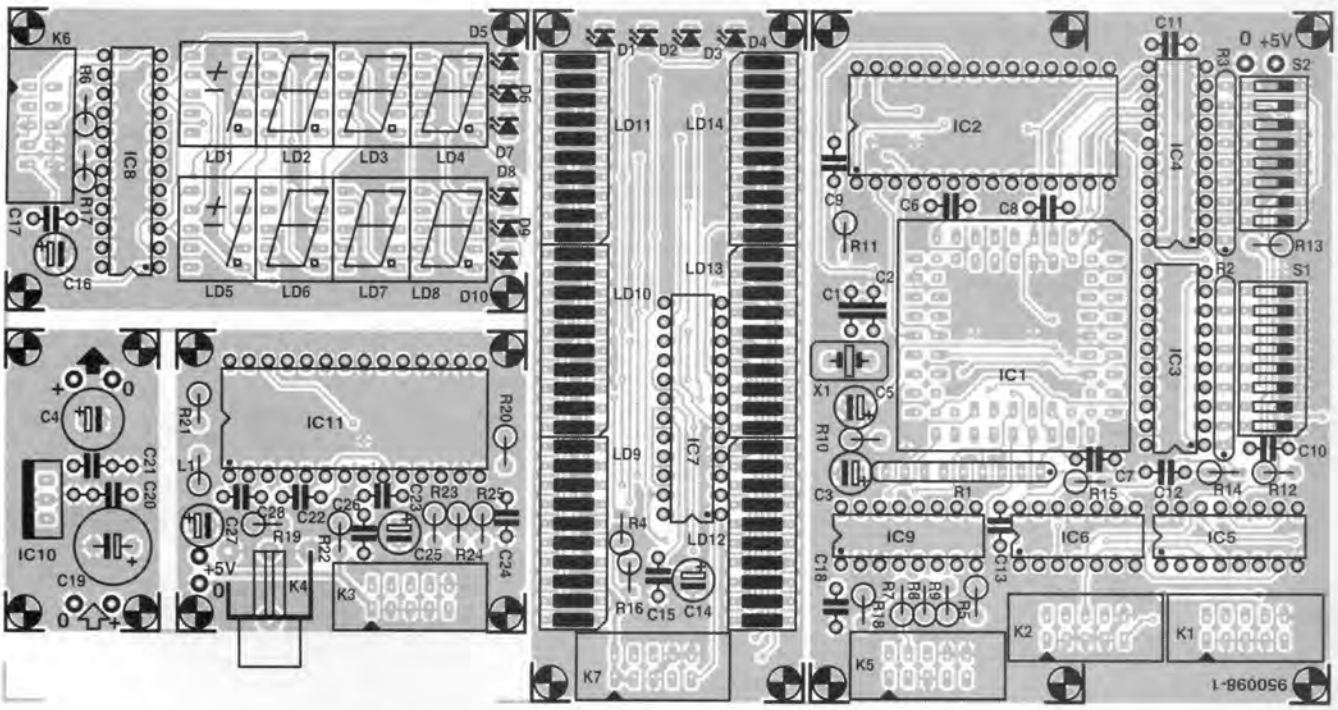

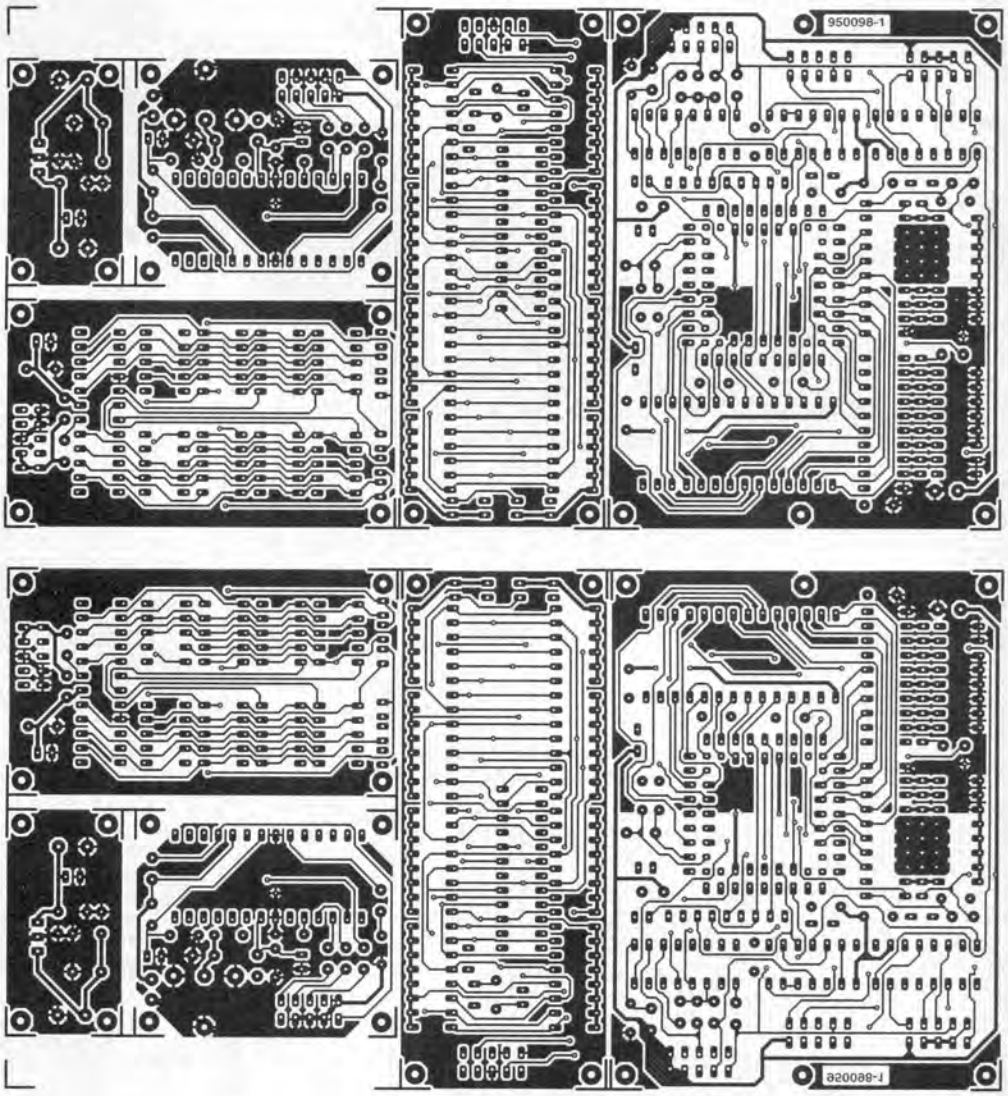

Parts list

Resistors:
R_1–R_3 = 8×10 kΩ array
R_4–R_9, R_{21} = 10 kΩ
R_{10}, R_{16}, R_{17} = 2.2 Ω
R_{11}–R_{15}, R_{18}, R_{22} = 4.7 Ω
R_{19} = 75 Ω
R_{20} = 1 kΩ
R_{23}–R_{25} = 47 Ω

Capacitors:
C_1, C_2 = 22 pF
C_3, C_5, C_{14}, C_{16}, C_{25}, C_{27} = 10 μF, 63 V, radial
C_4 = 100 μF, 25 V, radial
C_6–C_{13}, C_{15}, C_{17}, C_{18}, C_{26}, C_{28} = 47 nF, ceramic
C_{19} = 1000 μF, 16 V, radial
C_{20}, C_{21} = 100 nF, ceramic
C_{22}, C_{23} = 10 nF, ceramic
C_{24} = 47 nF, MKT (metallized polyester), pitch 5 mm

Inductors:
L_1 = 47 μH

Semiconductors:
D_1–D_4, D_7–D_{10} = LED, 3 mm, red
D_5 = LED, 3 mm, green
D_6 = LED, 3 mm, yellow

Integrated circuits:
IC_1 = ADSP-2105 KP-40 (Analog Devices)
IC_2 = 27C512 (programmed: Order no. 946646-1)*
IC_3, IC_4 = 74HC540
IC_5 = 74HC257
IC_6 = 74HC04
IC_7, IC_8 = MAX7219CNG (Maxim)
IC_9 = 74HC137
IC_{10} = 7805
IC_{11} = CS8412CP (Crystal)

Miscellaneous:
K_1–K_3, K_5 = 10-way header
K_4 = audio connector for board mounting
K_6, K_7 = 10-way flatcable connector for board mounting
S_1, S_2 = 8-pole DIP switch
X_1 = crystal, 10 MHz
LD_1, LD_5 = HDSP-F008 (Hewlett Packard)
LD_2–LD_4, LD_6–LD_8 = HDSP-F003 (Hewlett Packard)
LD_9–LD_{14} = HDSP-4820 (red) or HDSP-4850 (green) from Hewlett Packard; or MV54164 (green) or MV57614 (red) from Quality Technology
Enclosure 80×200×132 mm (3 3/16×7 15/16×5 1/4 in) (h×w×d); e.g. Telet (Italy) Type LC750
PCB Order no. 950098*

* The PCB and EPROM are available as a package Order no. 950098-C

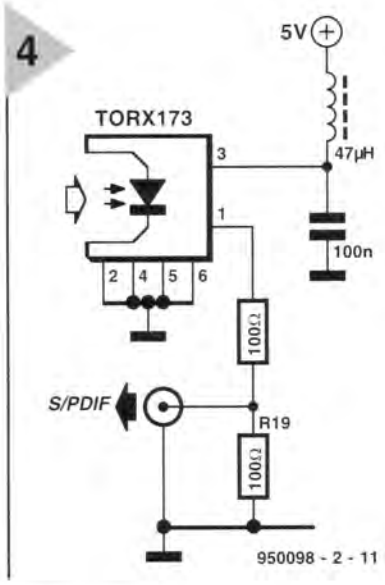

Figure 4. The meter may be provided in a simple way with an optical input and a coaxial output.

socket. Pay good attention to the position of pin 1, because once the socket has been fitted, it is very difficult to change its position. The IC fits into the socket only one way, so nothing can go amiss there. Fitting the remainder of the components and parts should not present any undue difficulties.

Set the various DIP switches as required—see Table 1 in Part 1. In case of doubt, the following is a good default configuration:
S1.3, S1.4, S2.1–S2.6 all 'on' and the remainder of the switches 'off'.

Figure 5 shows how the five boards are interconnected, but do not make any connections yet, because each of the boards has to be tested independently.

INITIAL SWITCH-ON

When the boards are completed and a visual inspection has not thrown up any errors, each of them should be tested, starting with the supply board. Connect a 9–12 V mains adaptor to this board. Its output should then carry a stable potential of 5 V. When this requirement has been met, connect the board to the mother board.

To this end, some cables need to be made up: (1) a flatcable terminated at one end into a 10-pin crimp-on connector and at the other end into two board connectors, and (2) a ribbon cable terminated at each end into a crimp-on connector. The length of these cable depends on the type of enclosure used for housing the meter.

The first flatcable interconnects K_5, K_6 and K_7, and the second links the S/PDIF interface to the mother board. If use is made of the possibility of mounting the LED bar directly above the mother board (for which suitable holes have been provided in the board), the distance between K_5 and K_7 is ≤ 2 cm. Keep the relevant cable as short as possible to minimize the spurious radiation it emanates.

After the supply voltage has been switched on, the centre segment of the alphanumeric displays should light. If they do, it is virtually certain that the mother board functions correctly.

Connect the *digital* output of a sound source, for instance a DCC recorder, DAT recorder, or CD player to the input of the meter via a coaxial cable. When the first sounds emanate from the audio system, the LEDS will indicate the (relative) sound level. If there is no free digital output available on the recorder or CD player, use a digital output on the audio amplifier or digital-to-analogue converter (DAC) to which the recorder or player is connected. If all that is not possible, build the 'Splitter for S/PDIF coax/optical output' (*Elektor Electronics*, July/August 1995, page 78). An alternative is building the circuit in Figure 4, which gives the meter an additional output.

FAULTFINDING

In the unlikely event that the meter does not work (correctly) when it is first switched on, the circuit may actually help in faultfinding.

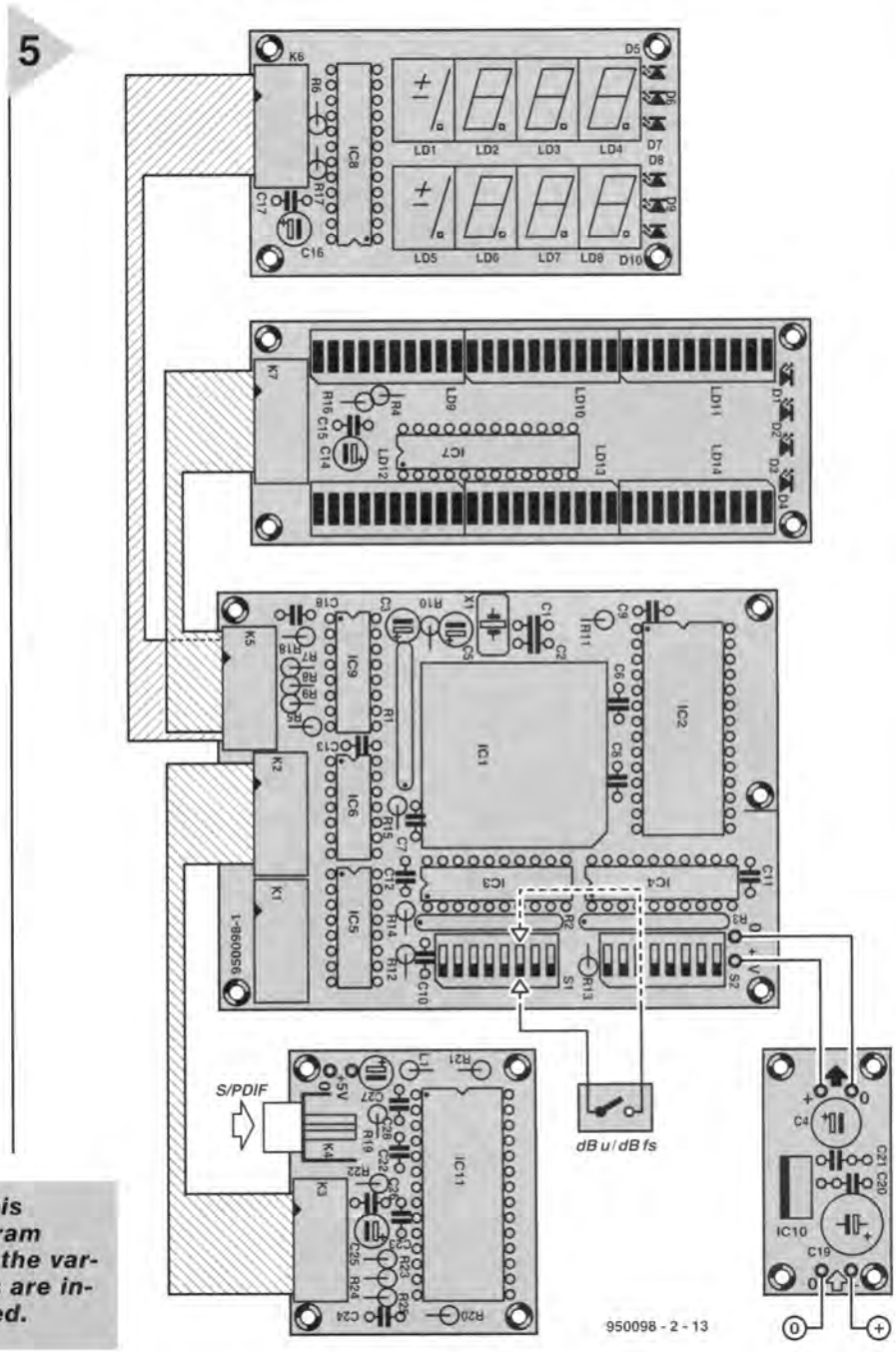

Figure 5. This wiring diagram shows how the various boards are interconnected.

6

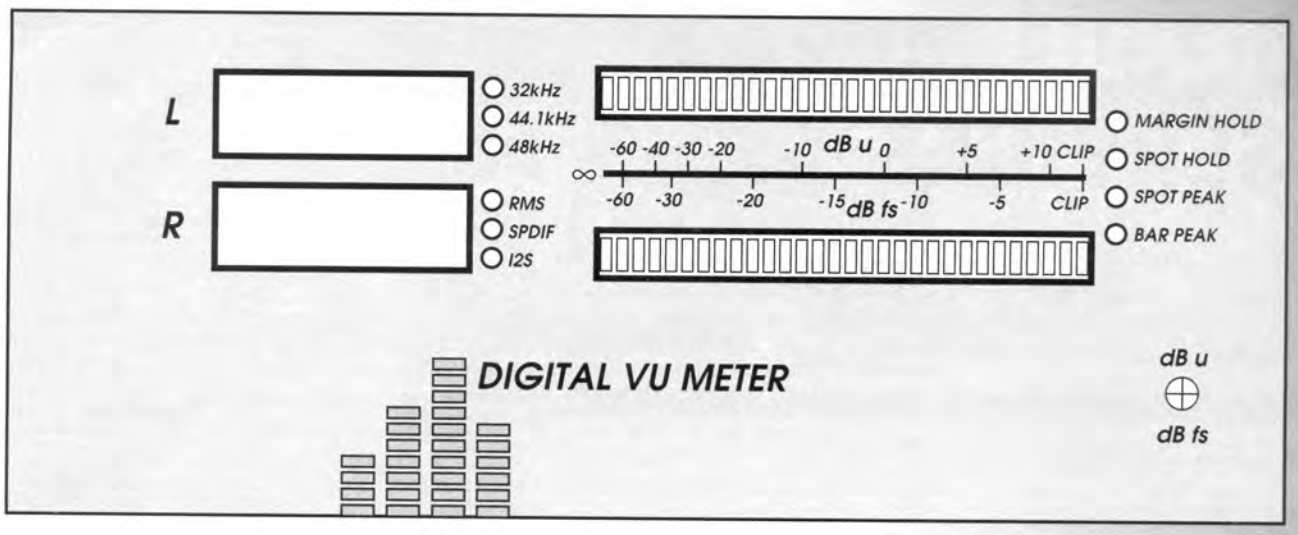

Figure 6. This illustration is a good basis for a design-it-yourself front panel for the meter.

First, check the supply voltage across C_4; if this is 5 V, the power supply is working correctly. In that case, check that the supplies to all ICs are all right: measure these carefully at the IC pins, not at the sockets. If they are all right, the S/PDIF decoder needs to be checked.

It will be remembered that the decoder retrieves the audio information from the digital data stream and also generates the clock that controls the displays. With the supply switched on and a digital S/PDIF audio signal applied to K_4, the clock must be present at pin 12 of IC_{11}. At the same time, the digital data should appear at pin 26, and the synchronization signal at pin 11. The clock should also be present at pin 13 of display controller IC_7 and IC_8.

If up to this stage everything works correctly, the operation of the DSP should be checked with an oscilloscope, starting with the oscillator. The operation of the IC can be checked only if there is a clock signal. Immediately upon power-on, the DSP reads the content of the boot ROM, IC_2. Short-circuit R_3 briefly and check whether within a few milliseconds of the short-circuit being removed there is activity on the address bus and data bus. If there is not, IC_1 is almost certainly defect and must be replaced. After the program has been written into the IC, there must be activity on lines Load (pin 53) and SDO (pin 52).

When the circuit works satisfactorily, it should be built into a suitable enclosure. If this has the same dimensions as that of the prototype, a front panel as shown in **Figure 6** can be used: a ready-made foil for this available—see the Readers Services column elsewhere in this issue.

USING THE METER

The meter may be used in a specific audio system or in a digital audio workroom. Because of its digital design, it does not need to be calibrated. **Figure 7** summarizes the (relative) audio level associated with a lighted LED in the bar. An optimum setting for a specific application may be achieved with the DIP switches. **Table 2** shows how the brightness of the displays can be adapted with these switches.

(960098-2)

Table 2. Brightness of LED displays w.r.t. maximum brightness for various settings of DIP switches

Bar-display			Brightness (relative) %
B2	B1	B0	
0	0	0	56.25
0	0	1	62.50
0	1	0	68.75
0	1	1	75.00
1	0	0	81.25
1	0	1	87.50
1	1	0	93.75
1	1	1	100
Margin-display			
M2	M1	M0	
0	0	0	56.25
0	0	1	62.50
0	1	0	68.75
0	1	1	75.00
1	0	0	81.25
1	0	1	87.50
1	1	0	93.75
1	1	1	100

Figure 7. Each LED of the bar display represents a (relative) audio signal level. The scale illustrated shows which level is associated with which LED.

7

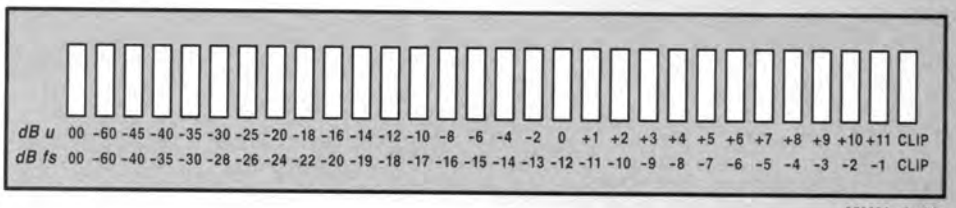

SIMM TESTER

Dear Editor—I have constructed the simm tester, which was published in the February 1996 issue of your magazine. The construction differed in that the main PCB was mounted in a case and the smaller SIMM board was mounted on top of the same case. The PCB and EPROM were purchased from you.

The construction went very well, but when it came to testing the SIMM modules, I encountered problems.

On power-up of the SIMM tester, the main menu comes up without any problem and when I test 30-pin SIMMS in auto and manual, once again, everything seems to be fine. But when I try to test PS/2 72-pin SIMMS, I get problems as follows.

When I mount 4 MB *32 72-pin SIMMS and I press the auto sequence, what is displayed on the LCD is 1 M*32 and sometimes it displays 2M*32. When I use the manual sequence, entering 4M*32, it goes through most of the test sequence, but then it suddenly comes up with:

RD: 2A RAS2 7FF
XPCT: AA CAS3 7FF
or
RD: FF RAS2 7FF
XPCT: 00 CAS3 3FF

which is clearly not right.

I have tried testing many different 4 MB 72-pin SIMMS with the same result and I have tried debugging the board, but nothing has shown up. Has the same problem arisen at any time; could it be the software as it differs from the one shown in the magazine, or, if not, a pointer in the right direction would be appreciated.

Z.F. Chetnik
Market Harborough

The designer comments: "You may not have a problem at all! A PS/2 style 8 MB ram is usually organized as 2 Mb × 32. Similarly, a 4 MB simm is organized as 1 Mb × 32. The results of the automatic type recognition performed by the SIMM tester are, therefore, correct. However, the circuit does not work properly with some of the latest PS/2 SIMM types in particular those with type identifier xx16400 or xxc4000. This is probably caused by the different row/column organization of the DRAM matrix used in these ics. The ICS are often used in combination with the Saturn and Triton chip sets.

Also, the simm tester will not test EDO RAM properly.

Please advise us about the exact chips your are using so that we may investigate the problem in greater detail.

[Editor]

SOFTWARE PROTECTION

To ensure that our diskettes are delivered free of any viruses, they are checked and processed as follows.

Following the standard test, the diskette is checked thoroughly for viruses, for which use is made of the very latest virus data. When the virus scan is completed, files DIAGNOSE.EXE and CHECK.BAT are put on to the disk. A fingerprint is made of the entire disk, which is stored in file DIAGNOSE.FIN. An explanation on the control is given with the aid of CHECK.BAT after this file has been started with the correct parameter. This parameter determines the language in which the explanation is given (1=English; 2=German; 3=Dutch and 4=French).

CHECK.BAT actuates DIAGNOSE.EXE. This program checks the content of the disk on the basis of the fingerprint in DIAGNOSE.FIN. The execution of program DIAGNOSE.EXE is diverted to make it transparent to the user. CHECK.BAT translates the diverted data into unambiguous screen data. If even only one bit in a file on the disk has been altered, CHECK.BAT signals that the diskette is not correct and the user should contact Elektor Electronics.

It will be clear that that the content of the diskette must not have been modified prior to a check with CHECK.BAT. It is for this reason that the read/write protection slide has been permanently secured in the read position, so that nothing can be modified by accident. Before using the diskette, it should be copied to a hard disk or another diskette. From that moment, do not use CHECK.BAT again. The signals generated by CHECK.BAT are valid only for diskettes of which the read/write protection slide has been permanently secured in the read position.

It may happen that the diskette cannot be copied with the aid of diskcopy, which is signalled by CHECK.BAT. This is because in the production process sometimes not the whole disk but only that part which contains data is copied.

SOUNDBLASTER PROBLEMS

Dear Editor—I must advise you that I cannot accept the software for the 'PC soundcard as AF analyser' in its present form. The article describes an interesting and inexpensive measurement system for audio applications, but it does not say that the software only works with a soundblaster set to IRQ5 and DMA5. In my computer, this is impossible, owing to other hardware.

Are you likely to publish an update that can work with other settings?

H. Kuster, Germany

Sorry about this! There is no update planned as yet, but we will keep your name on file for future reference.

[Editor]

COPYING AUDIO FROM VCR

Dear Editor—There are two ways to record signals with a VCR: (1) the composite h.f. signal,with the aid of a coaxial cable; (2) the separated audio and video signals via the SCART connector. In principle, it must, therefore, be possible to record audio signals only, even if there is no video signal. Taking this a step further, it should be possible under certain conditions to record sound from an audio system with a simple VCR. However, I have not been able to do it. What am I doing wrong?

J. v. Oyen, the Netherlands

Only hi-fi VCRS have a facility for recording sound without video signals. A standard mono VCR cannot do this. The only way we can think of tricking such a recorder into meeting your requirements is to try to get it to work by applying a (simply generated) pseudo sync signal. We have no practical experience of this, so we cannot vouch that it will work. Perhaps there are other readers who have been confronted with, and solved, this problem.

The sound track of a standard VCR is fairly unsophisticated. It is a narrow track at the bottom of the video tape that works with a fixed record/playback head. Owing to the low tape speed, the bandwidth is very modest. The average audio cassette player is better.

In a hi-fi VCR, two extra heads are used on the video head drum and these place the sound on to the video tape by means of frequency modulation.

[Editor]

UP/DOWN COUNTER

Dear Editor—Recently, I had to use an up/down counter for a certain application. Unfortunately, the counter could not cope with the situation in which the pulse and the up/down signal changed simultaneously. I have solved this difficulty, which works well in practice, and is, moreover, simple to build and costs little.
The pulse is delayed with the aid of a 4538, whereupon the (rather longer) switching pulse arrives just a little earlier than the count pulse. It all works very satisfactorily!

M. Rorye, the Netherlands

Well done! Our designers often encounter similar difficulties and the relevant published projects are modified as a result. Your solution is, perhaps, just a little too specific to serve as the basis of a project.

[Editor]

Fixed Output 10W CMOS
Step-Up Switching Regulators

Manufacturer: Maxim Integrated Products, 120 San Gabriel Drive, Sunnyvale, CA 94086, U.S.A. Tel. (408) 737-7600, Fax (408) 737-7194. Internet: http://www.mxim.com/

963009-13

The MAX641/642/643 step-up switching regulators are designed for minimum component DC-DC converter circuits in the 5 mW to 10 W range.
Low-power application require only an output filter capacitor and a small, low-cost inductor. An additional MOSFET or bipolar transistor is needed for high-power applications.

Low-battery detection circuitry is included on chip. The MAX641/642/643 are preset for +5 V, +12 V and +15 V outputs, respectively. However, the regulators can be set to other levels by adding 2 resistors.

Applications

- Simple, high-efficiency DC-DC converters
- Uninterruptible board-level power supplies
- Power conditioning for battery systems
- Portable instruments and communications

TOP VIEW

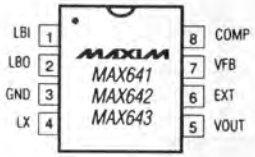

DIP/SO

Pin Connection

Pin	Name	Function
1	LBI	Low-battery input. When the voltage at LBI is lower than the Low Battery Detector threshold (+1.31 V), LBO sinks current.
2	LBO	The Low-Battery Detector Output is an open-drain N-channel MOSFET which sinks current when the LBI input is below +1.31 V.
3	GND	Ground
4	LX	In low-power applications, LX drives the external inductor with an internal N-channel power MOSFET. LX has a typical output resistance of 6 Ω and a peak current rating of 450 mA.
5	VOUT	The regulated DC-DC converter when the internal MOSFET and catch diode are used. When an external diode is used, this pin becomes the supply voltage input pin and is usually connected to the cathode of the external diode.
6	EXT	The drive output for an external power MOSFET or bipolar transistor. EXT swings from GND to VOUT and has approximately 100 Ω sink/source impedance. EXT is low when LX is on.
7	VFB	When VFB is grounded, the DC-DC converter output will be the factory preset value. When an external voltage divider is connected to VFB, this pin becomes the feedback input for adjustable output operation.
8	COMP	The Compensation input is connected to the internal voltage divider which sets the fixed voltage output. In some circuit board layouts, a lead compensation capacitor (100 pF to 10 nF) connected to VOUT and COMP reduces low-frequency ripple and improved transient response. Ground COMP when using an external voltage divider on VFB.

MAX641/642/643

ELEKTOR ELECTRONICS

Power Supplies **DATASHEET 05/96**

Electrical characteristics

(TA = +25°C, unless otherwise noted)

Parameter	Symbol	Conditions	Min	Typ	Max	Units
Operating Voltage	$+V_S$	Voltage at VOUT Over temperature	2.0		16.5	V
Start-up Voltage	$+V_S$	Voltage at VOUT T_A = +25°C Over Temperature	1.5 1.8	1.3		V
Supply Current	I_S	LX Off, Over Temperature VOUT = +5V VOUT = +12V VOUT = +15V		0.135 0.5 0.75	0.4 2.0 2.5	mA
Reference voltage (internal)	V_{REF}	TA = 25°C Over Temperature	1.24 1.20	1.31	1.38 1.42	V
VOUT Voltage (Note 1)		No Load, VFB = GND, Over Temperature MAX641A, MAX642A, MAX643A (5% Output Accuracy)	4.75 11.4 14.25	5.0 12.0 15.0	5.25 12.6 15.75	V
		MAX641B, MAX642B, MAX643B (10% Output Accuracy)	4.5 10.8 13.5	5.0 12.0 15.0	5.5 13.2 16.5	
Efficiency		With External MOSFET		80		%
Line Regulation (Note 1)		0.5VOUT<+Vs<VOUT		0.08	%VOUT	
Load Regulation (Note 1)		+Vs = 0.5VOUT, POUT = 0mW to 150mW		0.2		%VOUT
Oscillator Frequency	f_0	MAX641A MAX641B	40 37.5	45 45	50 56.5	kHz
		MAX642A MAX642B	45.5 42	50 50	56 62.5	
		MAX643A MAX643B	45.5 42	50 50	56 62.5	
Diode Forward Voltage	V_F	IF=100mA			1.0	V
VFB Input Bias Current	I_{FB}			0.01	10	nA
Low Battery Threshold	V_{LBI}			1.31		V
LoW battery Output Current	I_{LBO}	V2=+0.4V, V1=+1.1V TA = 25°C Over Temperature	0.5	1.0		mA

Note 1: Guaranteed by correlation with DC pulse measurements.

Inductance values

Inductance values for commonly encountered power supplies are listed in the table below. For a extensive discussion on inductance calculation and design parameters, refer to the datasheets published by Maxim.

Maxim Part no	V_{IN} (V)	V_{OUT} (V)	I_{OUT} (mA)	Typ. Eff. (%)	I_{pk} (A)	Inductor (L) mH	Ω
MAX641	3	5	200	83	1.3	100	0.1
	3	5	300	80	2.0	47	0.05
MAX642	5	12	200	91	1.2	39	0.05
	5	12	350	89	2	18	0.03
	5	12	550	87	3.5	12	0.01
MAX643	5	15	100	92	1.2	39	0.05
	5	15	150	89	1.5	27	0.04
	5	15	225	89	2	18	0.03
	5	15	325	85	3.5	12	0.01

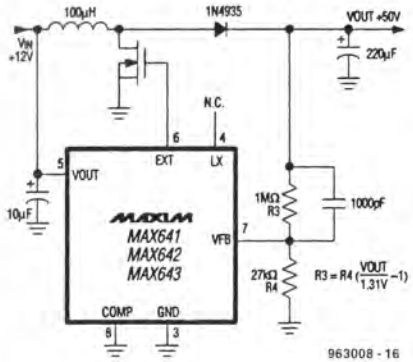

High-Voltage Step-Up Converter

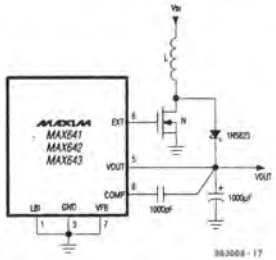

High Output Current Step-Up Converter

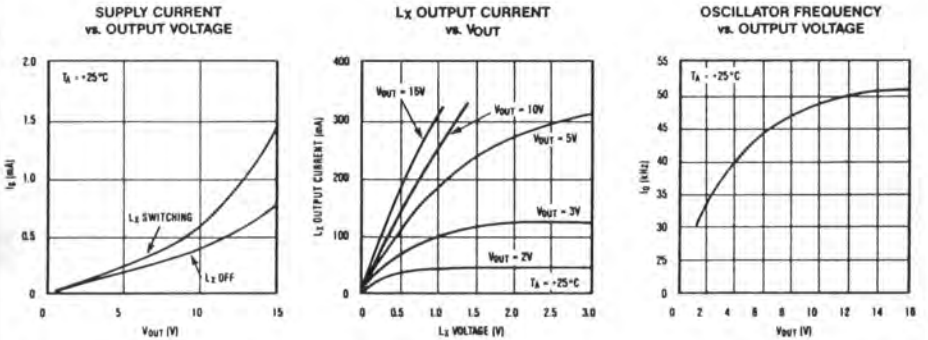

Application example

Chess Clock, *Elektor Electronics* May 1996

Features

- Fixed +5 V, +12 V, +15 V output voltages
- Adjustable output with two resistors
- On-chip driver for high-power external MOSFET
- 135 µA typ. operating current
- 80% typ. efficiency
- 8-pin narrow-DIP and narrow SO packages

Typical Operating Circuit

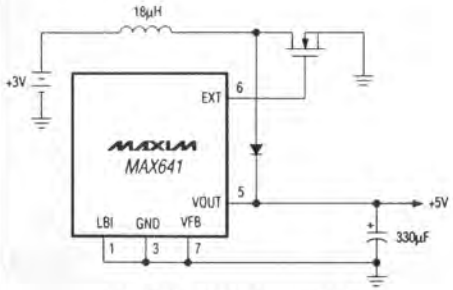

+5V OUTPUT DC-DC CONVERTER

963009-12

V_{IN}, Bootstrapped Operation

These ICs do not have a VIN pin. Input power to start the DC-DC converter is supplied via the external inductor (and diode, if used) to the V_{OUT} pin. Once the converter has started, it is powered from its own output. This design ensures that the internal output MOSFET will have maximum gate derive and, hence, a minimum R_{ON}. It also allows the converter to start at lower input voltages.

$V_{IN} > V_{OUT}$

If the regulator's input voltage is more than 1 forward diode drop greater than the desired output voltage, the EXT and LX outputs will not turn on, and the output will no longer be regulated. However, current will be supplied to the load directly through the internal catch diode. As long as the input is more than 0.6 V above the desired output, the output will equal the input voltage, less the forward drop of the catch diode.

Fixed or adjustable output

For operation at one of the preset output voltages, VFB is connected to GND, and no external

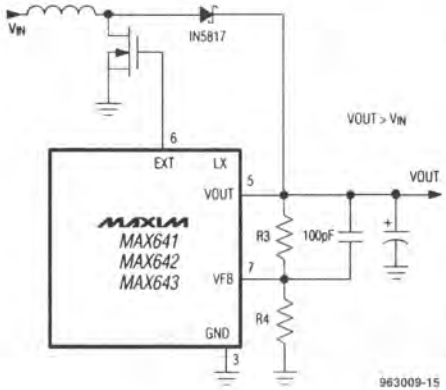

resistors are required. For other output voltages a voltage divider is connected to VFB as shown in the diagram. VOUT is set by R3 and R4 as follows. Let R4 be any resistance in the 10 kΩ to 10 MΩ range, typically 100 kΩ, then
R3 = R4(VOUT/1.31 − 1)

Low Battery Detector

This internal circuit compares the voltage on the LBI input with the internal +1.31 V bandgap reference. The LBO pin goes low whenever the input voltage at LBI is less than +1.31 V. The low-battery threshold is set by a potential divider, R1-R2, connected to the LBI input. R1 is connected to the input voltage, R2, to ground. Assuming that R2 is typically 100 kΩ, then
R1 = R2 (V_{LB}/1.31V) − 1

NULL MODEM FOR CASIO FX850/880P

Many owners of Casio FX850/880P scientific calculators turn green with envy at the sheer simplicity of data exchange between two HP pocket calculators. These machines use infra-red data (IrDa) transmission to exchange data and programs without any additional interface. Although the FX850/880P has no IrDA features like its HP rivals, it can be used to communicate with another FX850/880P without problems. We show you how to do this the low-budget way by using the machine's serial interface connector and a few lines of BASIC.

Design by N. Fries

three wires for Casio-to-Casio communication

Mind you, the Casio FX850P/880P is by no means a poor performer when it comes to exchanging data and programs between two calculators – with some other, low-end, scientific calculators you can only exchange data via cassette tapes, or via a PC!

Fortunately, the Casio FX850P, and its successor, the FX880P, has a serial interface connector that allows a practical and affordable way of transmitting and receiving programs and data. Actually, we are talking about a *null-modem* between two identical machines.

Two Casios fooled

A null-modem is a device which fools a computer into thinking that it is driving a slave device via its serial link. Originally, a null-modem was a testing device for the RS232 port on a dumb terminal (as used in the seventies), allowing service engineers and network operators to make such terminals receive back their own output. In fact, it was just a 25-pin D connector with a few wire links! Since then, the term is used to refer to a function rather than an actual testing device. In the world of PCs, a null-modem refers to a

Casio via Internet and snail-mail

There are several sites on the Internet which hold information on the Casio series of scientific calculators. Casio run a nice web site with a full overview of currently available products (complete with specifications) on ***http://www.casio-usa.com****. Their e-mail address is* ***info@casio-usa.com****.*

There are also several sites operated by enthusiastic users of these calculators. One of these is the Silverstone BBS at ***http://www.abc.se/~m9935/casio.html****. Just use a search engine like Yahoo or WebCrawler, and you will find dozens of other links with information ranging from programs to a Casio Swap Spot!*
Finally, the snailmail addresses of the Casio offices in Europe:
Casio Electronics Co. Ltd., Unit 6, North Circular Road, London NW2 7JD. And in the U.S.A.:
Casio Inc., 570 Mount Pleasant Ave., Dover, NJ 07801.

1

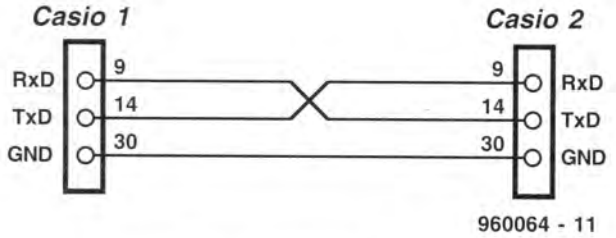

Fig. 1. Three-wire connection between two Casio FX850P/880P: data exchange on a shoestring.

crossed link between two computers, fooling both into believing that it is talking to a 'slave' device with full handshaking (like a modem, hence the name *null-modem*).

The same can be done with two Casio calculators, as illustrated in **Fig. 1**. The pinning shown refers to the serial interface connector on the Casio. No circuit, really, no parts either, just three wires to do the job. As you can see, the TxD (transmit data) and RxD (receive data) lines are crossed between the two calculators, while the third wire is a straight-through ground connection. The wires are soldered to a special 2×15-pin connector (with a 0.05-inch raster) at each end. Unfortunately, these connectors (**figure. 2**) are oddballs, and they may be difficult to find in the regular electronic components trade. They may be obtained, however, via authorized Casio dealers, or via the Casio User Club, c/o N. Fries, Hilgenland 2b, D-58099 Hagen, Germany.

What about a PC link?

Both the Casio FX850P and the FX880P have full-featured serial interface connectors. The only problem is formed by the non-standard signal levels, which are TTL (or CMOS) compatible between 0 V and +5 V.

According to the RS232 (CCITT V.24) standard, however, a logic 0 is represented by a voltage level between +3 V and +15 V, and a logic 1, by a level between −3 V and −15 V. The range between +3 V and −3 V is not defined. Because of this, a link between a Casio FX850P/880P and a PC must have a suitable level converter. In most cases, that means using the familiar MAX232 from Maxim.

How to use the link

Exchanging programs between two Casio calculators is done as follows:

1. Switch off both calculators.
2. Connect the calculators via the null-modem cable.
3. Switch on both calculators.
4. Switch the master calculator (source) to MODE 1 (BASIC mode), press [SHIFT] + Px to select the program memory which holds the program to be copied to the other calculator, then type
   SAVE "COM0:6,N,8,1,N,N,N,B,N".
5. Switch the slave calculator (target) to MODE 1 (BASIC mode).
6. Select the target program memory with [SHIFT] + Px, then type
   LOAD "COM0:6,N,8,1,N,N,N,B,N".
7. Press the [EXE] key on the slave calculator.
8. Press the [EXE] key on the master calculator.

The master will then transmit the relevant program to the slave. During the transmission, the display will show a light flicker. This is your indication that the exchange is in progress.

9. To start the program on the slave calculator, interrupt the transmission by pressing the [BRK] key. Type 'MODE 0' to switch the Casio to CAL mode. Next, the program may be started by calling the memory range using [SHIFT] + Px.

Troubleshooting and a final tip

In case the Casio cancels the transmission and displays 'FC ERROR', an overflow has occurred in the buffer. This is caused by a too high data transmission rate.

A frequently made mistake is also to type a letter 'O' instead of a figure '0', so take care.

Further sources of trouble, and of course, hints to solve them, may be found in the Casio manual, pages 89 and 415.

Finally, a tip: if you don't like typing, just enter the
LOAD "COM0;6,E,8,1,n,n,n,b,n"
command once, and then press the IN key. In this way, you store this typo-nightmare into the Function memory of the Casio, from which it is easily retrieved, as often as you like, by pressing the IN key.

(960064)

2

1	VCC	2	DSR
3	CD	4	CTS
5	---	6	BUSY
7	---	8	---
9	RxD	10	INIT
11	STROBE	12	DTR
13	RTS	14	TxD
15	---	16	DATA3
17	DATA4	18	DATA2
19	DATA5	20	DATA1
21	DATA6	22	DATA0
23	DATA7	24	---
25	---	26	---
27	---	28	WE
29	CS	30	GND

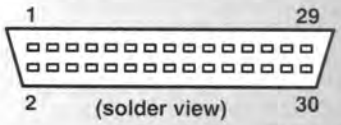

960064 - 12

Fig. 2. For reference: pin functions of the serial interface connector on the Casio FX850P/880P.

Electronics principles 3.0 for Windows

Electronics Principles 3.0 is completely new electronics software for Windows 3.1 or later, and does not require either of the previous versions to be loaded on your computer. It contains a total of sixty-four windows which you can open and switch between, thereby accessing an extended range of 284 fully interactive analogue and digital electronics topics in full colour.

The software is fully self-contained, including self-explanatory text and calculations laid out in additional windows. You will see the effect of changing component values within the formulae. Graphics can be printed for a hard copy reference.

For a comprehensive discussion of Electronics Principles theory, two additional inexpensive books are recommended, to go with the software. Teach-In No 6, 'Design your own circuits' by Mike Tooley (£3.45) and Teach-In No 7, 'A complete electronics course' by Alan Winstanley and Keith Dye (£3.95). Both are available from EPT Educational Software. The price of Electronics Principles 3.0 is £49.95 plus P&P.

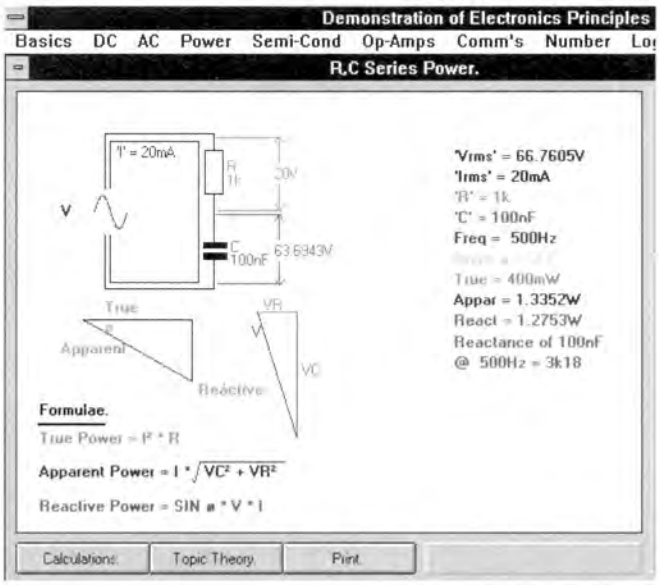

EPT Educational Software, Pump House, Lockram Lane, Witham, Essex CM8 2BJ. Tel./fax: (01376) 514008. E-mail: sales@eptsoft.demon.co.uk.

WWW pages at http://www.octagon.co.uk/ext/ept/software.htm.

Run & Recharge Your Notebook in the Car

The new CE approved PROwatt DC to AC power inverters convert battery power into 230 VAC mains electricity to run and recharge notebook computers in a vehicle. Also ideal for powering bubblejet printers and other peripherals in cars for completely mobile offices.

The PROwatt 150i and 250i are compact enough for mobile applications, and will fit into a notebook or brief case. They weigh just 620 and 740 grammes respectively. The units are simply connected via a cigar lighter plug. 230 VAC mains is accessible from the IEC320 socket on its case.

A new, unique, daughterboard arrangement helps regulate output current and improve surge capability to assist the running of difficult loads such as SVGA computer monitors. Thanks to improved current regulation, the life of the inverter is considerably extended.

Standard safety features include overheat and overload protection for complete peace of mind. The PROwatt 150i and 250i also sense low input battery voltage. Should this reach a preset level, the unit will emit an audible warning, allowing users to save their work and turn off to prevent damage to the vehicle's battery, and allow the user to restart the vehicle engine.

The PROwatt 150i and 250i retail at £86 and £120 respectively, ex VAT and carriage, and are available form UK importers of Merlin Equipment.

Merlin Equipment, Unit1, Hithercroft Court, Lupton Road, Hithercroft Industrial Estate, Wallingford, Oxfordshire OX10 9BT. Tel. (01491) 824333, fax (01491) 824466.

Super low-noise HEMT for DBS LNCs

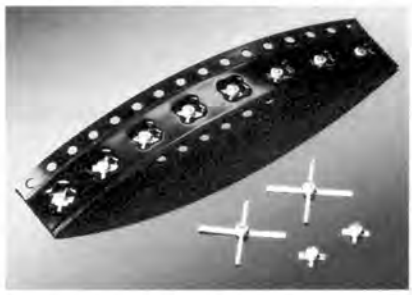

Mitsubishi Electric introduces their next series of InGaAs HEMTs for DBS low-noise converters.

The optimised device structure of these new devices renders outstanding electrical performance: a typical noise figure NF=0.45 dB (MGF4319F) and NF=0.65 dB (MGF4316F) can be achieved with an associated gain Gs≥ 10 dB.

The MGF43xxF series comes in a hermetically sealed package, designed for minimum parasitic losses and suitable for microstrip circuits.

For high volume production, these devices are available on tape carrier as MGF4916F and MGF4919F.

Mitsubishi Electric Europe GmbH, Semiconductor Division, Postfach 1549, D-40880 Ratingen, Germany. Tel. (+49) 2102 486-535, fax (+49) 2102 486-367.

electronics on-line

demo software for electronic simulation

As more and more people avail themselves of the opportunity to interconnect computers via the Internet, software development houses begin to recognize the vast potential of this new medium. This month's *electronics on-line* page presents a number of sites (Internet addresses) used by software developers to offer demonstration versions of their electronic simulation programs. These programs are often well worth looking at by the advanced hobbyist because the limitations of a demo version can be waved aside, or at least tolerated, for applications at home by the individual hobbyist. Furthermore, the Internet is a vast resource when it comes to collecting Spice models.

Spice, the *de-facto* electronics simulation program is produced by MicroSim Corporation in the U.S.A. Their Internet site at *http://www.microsim.com* contains, among others, a demonstration version of the Spice software. Alas, the site does not supply Spice models, and MicroSim, on being asked (via e-mail), indicated that there are no plans to come up with model files in the near future. Fortunately, the Net itself provides the answer to this problem, because component manufacturers do make an abundance of Spice files available via their own sites, at no cost to the user.

As a matter of course, one of the most prominent manufacturers of analogue components, Analog Devices, offers Spice models. On the Internet (*http://www.analog.com*), a library may be found containing over 500 models. Good for a start, we thought, but there is more on offer that can be browsed and fetched, free of charge, via the phone line.

Another electronic components giant, Burr-Brown, also runs an interesting Internet site at *http://www.burr-brown.com*. This has a support section where Spice models of Burr-Brown components may be found. MicroSim's main competitor, Intusoft, also appears to have a vast library of Spice models. A brief visit to their site at *http://www.intusoft.com* brings many thousands of models for, among others, dual-gate MOSFETs, fuses, digital ICs, IGBTs, and a wide range of digital components from Philips (ALS, FAST, HLL, LVC, LVT and ABT), within easy reach of any user connected to the web. Radio-frequency (RF) parts are supported via a library containing 300 models, while the collection of opamps has more than 1,400 items. It certainly pays to visit this web address, which, incidentally, also holds shape libraries for CAD programs like OrCAD and Protel.

Another interesting simulation system is **Smash 3** from Dolphin Integration. It allows you to simulate the operation of so-called mixed mode electronic circuits, i.e., circuits in which analogue and digital components are combined. Dolphin Integration is a French company which may be found on the Internet at *http://www.inria.fr/rii/dolphin-eng.html*. Unfortunately, the information on this site remains limited to a company profile. Browsing a bit further, however, we arrived at the doorstep of Capilano Computing at *http://www.capilano.com*. Capilano supply a number of CAD products, and their ftp (file transfer protocol) site offers demonstration versions of several programs, including Smash 3. The anonymous ftp site, *ftp://ftp.wimsey.com/pub/capilano/demo*, allows you to download demonstration versions of this program for the Macintosh, PowerMac and for Windows.

Finally, although the information mentioned above is free of charge, you should take into account the telephone bill and the cost of your subscription with a service provider. (965010)

Found a web site which other readers of Elektor Electronics should know about? Let us know the name and URL by e-mail (elektuur@euronet.nl). If the site is indeed useful and interesting, we'll put it in the limelight using this column.